BLODGETT®

Project _____

Item No. _____

Quantity _____

ZEPHAIRE-50E

MODEL ZEPHAIRE-50E

Half-size Electric Convection Oven

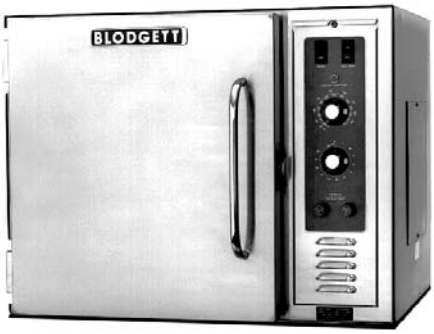

Standard depth baking compartment- accepts 13" x 18" standard half-size baking pans in front-to-back positions.
All data is shown per oven section, unless otherwise indicated.

EXTERIOR CONSTRUCTION

- Uni-body construction
- Stainless steel front, top, sides and back
- Solid stainless steel door with rubber gasket and door pin interlock
- Chrome plated single door handle
- Hinged door design
- Tilt-forward bottom hinged front control panel
- 1" (25.4mm) high temperature ceramic blanket insulation at top, back, sides and bottom

INTERIOR CONSTRUCTION

- Double-sided porcelainized baking compartment liner (14 gauge)
- Five chrome-plated racks, nine rack positions with a minimum of 1-5/8" (41 mm) spacing

OPERATION

- One serpentine tubular heater (5Kw)
- Solid state thermostat with temperature control range of 200°F (93°C) to 500°F (260°C)
- Single speed fan motor
- 1/4 horsepower blower motor with automatic thermal overload protection
- Control area cooling fan

STANDARD FEATURES

- Solid state manual controls with separate dials to control thermostat and timer
- 60-minute electric timer with buzzer
- One year parts and labor oven warranty
- Three year oven door warranty

* *For all international markets, contact your local distributor.*

OPTIONS AND ACCESSORIES

(AT ADDITIONAL CHARGE)

- **Stands:**
  - ❑ 5-3/4" stainless steel stand
  - ❑ 7" (178mm) stainless steel stand
  - ❑ 16" (406mm) stainless steel stand
  - ❑ 19" (483mm) stainless steel stand with shelf
  - ❑ 24" (610mm) stainless steel stand with shelf
  - ❑ 33" (838mm) stainless steel stand with shelf
  - ❑ 33" (838mm) open stand, stainless steel with rack guides
- ❑ 4" (102mm) black legs (not for use with stands)
- ❑ Cord set with receptacle
- ❑ Extra oven racks
- ❑ Stainless steel vent riser

BLODGETT OVEN COMPANY
www.blodgett.com
44 Lakeside Avenue, Burlington, VT 05401 • Phone: (802) 658-6600 • Fax: (802) 864-0183

ZEPHAIRE-50E

APPROVAL/STAMP

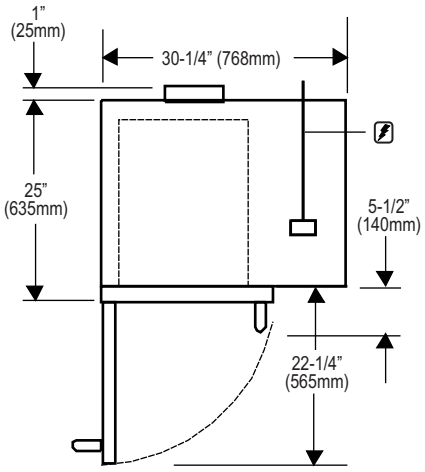

TOP VIEW

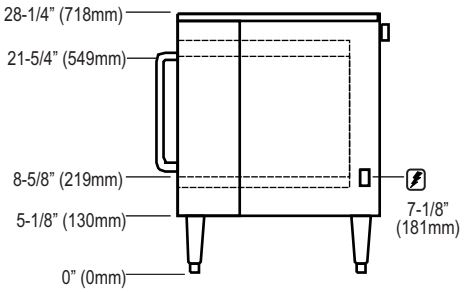

SINGLE

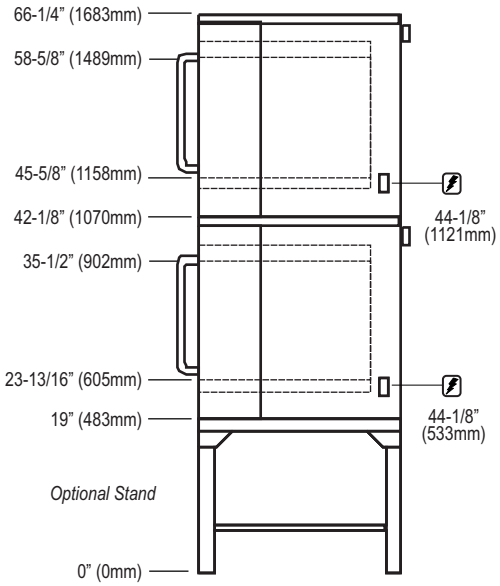

DOUBLE

SHORT FORM SPECIFICATIONS

Provide Blodgett half-size convection oven model Zephaire-50E. (single/double) compartment. Each compartment shall have double-sided porcelainized baking compartment liner and accepts five 13" x 18" standard half-size bake pans. Doors shall be solid stainless steel with silicone gasket and door pin interlock and a single chrome plated door handle. Unit shall be electrically heated with one serpentine tubular heater. Air in baking chamber distributed by single speed fan motor, powered by 1/4 horsepower blower motor with automatic thermal overload protection. Each chamber shall be fitted with five chrome-plated removable racks, and have nine rack positions. Control panel shall be recessed with solid state manual thermostat with temperature control range of (200° - 500°F), and 60 minute timer. Provide options and accessories as indicated.

DIMENSIONS:

Floor space: 30-1/4" (768mm) W x 25" (635mm) D
Product clearance: 0" from combustible and non-combustible construction.
Interior: 15-1/4" (387mm) W x 20" (508mm) H x 21" (533mm) D
If oven is on casters add to all height dimensions:
Single 4-1/2" (114mm)

MAXIMUM INPUT:

Single 5.1 KW
Double 10.2 KW (5.1 KW per section)

POWER SUPPLY:

Domestic*:

208 VAC	60 Hz.	1 phase	5.1KW	25/ - /25 Amperes
208 VAC	60 Hz.	*3 phase	5.1KW	25/0/25 Amperes
220/240 VAC	60 Hz.	1 phase	5.1KW	22/ - /22 Amperes
220/240 VAC	60 Hz.	*3 phase	5.1KW	22/0/22 Amperes

Export:

230 VAC	50 Hz.	1 phase	5.1KW	22/ - /22 Amperes

** Unit is wired single phase, but can be connected to three phase power supply.*

NOTE: *The company reserves the right to make substitutions of components without prior notice*

MINIMUM ENTRY CLEARANCE:

Uncrated 22-5/8" (575mm)
Crated 30-1/2" (755mm)

SHIPPING INFORMATION:

Approx. Weight:	**Crated**	**Uncrated**
Single	260 lbs. (118 kg)	225 lbs. (102 kg)
Double	520 lbs. (236 kg)	450 lbs. (204 kg)

Crate sizes:
Single:
30-1/2" (775mm) x 35" (889mm) x 33" (838mm)
Double: (ships in three crates)
(2) - 30-1/2" (775mm) x 35" (889mm) x 33" (838mm)
(1) - 33" (838mm) x 28" (711mm) x 9" (229mm)

BLODGETT OVEN COMPANY
www.blodgett.com
44 Lakeside Avenue, Burlington, VT 05401 • Phone: (802) 658-6600 • Fax: (802) 864-0183