REVISION 05/2025

Spec sheet

Invoq Hood 1/1 GN

Model 61BE: injection and boiler steam electric oven
Model 61BLE: injection steam electric oven
Model 101BE: injection and boiler steam electric oven
Model 101BLE: injection steam electric oven
Model 201BE: injection and boiler steam electric oven
Model 201BLE: injection steam electric oven

BLODGETT

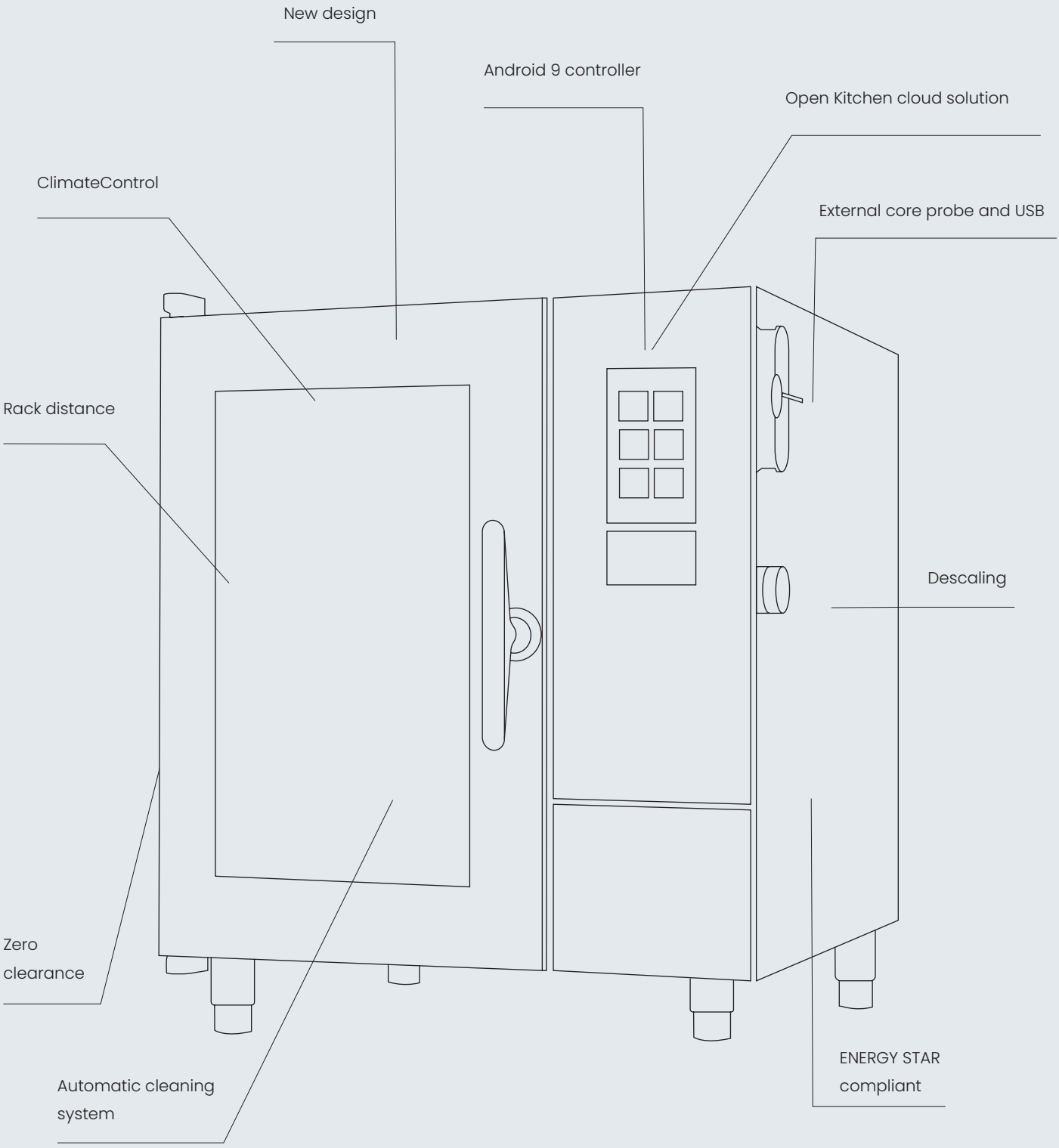
New design
Android 9 controller
Open Kitchen cloud solution
ClimateControl
External core probe and USB
Rack distance
Descaling
Zero
clearance
Automatic cleaning
system
ENERGY STAR
compliant

A whole new oven experience

Invoq Condensation Hood
By combining your Invoq oven with a condensation hood, you can concentrate your entire food production in just around ten square feet.
Experience improved comfort and reduced heat and humidity levels for enhanced working environment with the Invoq condensation hood solution.

Invoq Ventless Hoodini
Free yourself completely from ventilation systems and opt for the ventless Hoodini solution, which also removes any grease, vapors, odors and contaminated air from your kitchen. The Invoq Hoodini is filterless reducing your maintenance costs with no filter cleaning or replacements needed.

CAPACITY 6-1/1 GN
- Full size sheet pan, 1/1 GN or optional 400x600 EN
- 2-piece racks with 2.75" (70 mm) runners or other options (p. 11)
- 7 trays 1/1 GN or 6 trays 400x600 EN
- 5 trays full size sheet pans (using MultiRack)
- 9.9 lbs maximum food load per tray
- 69.4 lbs maximum food load per oven

CAPACITY 10-1/1 GN
- 1/1 GN or optional 400x600 EN
- 2-piece racks with 2.75" (70 mm) runners or other options (p. 11)
- 10 trays 1/1 GN or 9 trays 400x600 EN
- 8 trays full size sheet pans (using MultiRack)
- 9.9 lbs maximum food load per tray
- 99.2 lbs maximum food load per oven

Intelligence at the tip of your finger...

ClimateControl

ClimateControl ensures best-in-class performance, controlling the air, heat and humidity levels.
It optimises processes and even shortens cooking times. The result is consistent uniformity and predictably high quality.

CareCycle

Select between seven different cycles from Light to Intense, Turbo or Eco. The Invoq oven guides you through the process and suggests the optimal cleaning program and required amount of cleaning tablets for the desired cycle. This ensures that the ratio of detergent to water is always correct and you avoid overconsumption.

MenuPlanner

MenuPlanner allows you to cook many different items, unsupervised at the same time, using a simple drag and drop interface. Both experienced and inexperienced users will appreciate the automatic notifications that ensure efficient, precise and on-time consistency.

SmartChef

SmartChef helps you learn from the oven to develop your signature style. You select type of food, cooking method and temperature, and SmartChef will automatically guide you to a great result. Afterwards, you can save and, if necessary, edit the formula.

Electricity

Invoq Combi 6-1/1 GN
Invoq Hybrid 6-1/1 GN
Invoq Bake 6 400x600 EN

Dimensions & weight

Dimensions incl. handle (HxWxD) [mm/inch]	1231 x 937 x 946 / 48.5 x 36.9 x 37.2
Dimensions incl. handle and stand (HxWxD) [mm/inch]	1814 x 937 x 946 / 71.4 x 36.9 x 37.2
Shipping dimensions (HxWxD) [mm/inch]	1330 x 1000 x 1200 / 52.4 x 39.4 x 47.2
Net weight [kg/lbs]	203 / 448
Net weight addition for Hybrid 6-1/1 GN [kg/lbs]	9 / 20
Shipping weight [kg/lbs]	223 / 492
Clearance (left, back, right) [mm/inch]	0 x 0 x 40 / 0 x 0 x 1.6
Maximum working height [mm/inch] basic stand	1268 / 2795.5

Power requirements

Power consumption [kW]	10.3
Convection output [kW]	9
Grid supply frequency [Hz]	60
Voltage 208 V 3Ph AC	
Amperage [A]	31
RCD model	B/F
Voltage 240 V 3Ph AC	
Amperage [A]	28
RCD model	B/F
Voltage 440 V 3Ph AC	
Amperage [A]	18
RCD model	B/F
Voltage 480 V 3Ph AC	
Amperage [A]	17
RCD model	B/F

Hood power requirements

Voltage 230 V 1Ph AC	Condensation	Hoodini
Power consumption [kW]	0.36	1.5
Amperage [A]	5	10

Water requirements

Water connection [inches]	3/4
Drain [mm]	Ø50
Water pressure (min-max) [bar]	1-6
Water flow [l/m]	5.5

Heat emission

Latent heat load [kW]	0.20
Sensible heat output [kW]	0.86

Noise emission

Noise level without hood system [dB(A)]	<65
Noise level with hood system [dB(A)]	<65

IP classification

IPX5

IP class	IPX5

Data

Wi-Fi module	IEEE 802.11 b/g/n (2.4 GHz)
LAN	RJ45

This appliance uses a variable frequency drive, which can be known to product high frequency electrical noise. In some cases units must be hard wired. This avoids false positives on ground fault devices susceptible to errors from electrical noise. All installations must comply with local and national codes.
Further technical information can be found in the installation manual.

A	Drain outlet
B	Air outlet (drain)
C	Air intake
F	Ethernet connection
G	Electrical connection
W	Water inlet (filtered or unfiltered water)
X	Water inlet

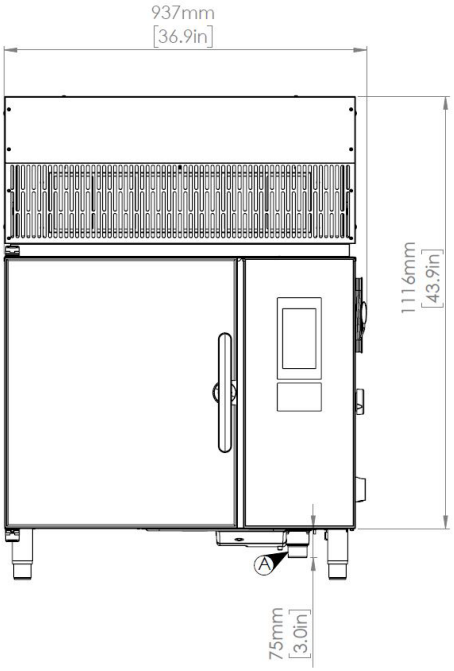

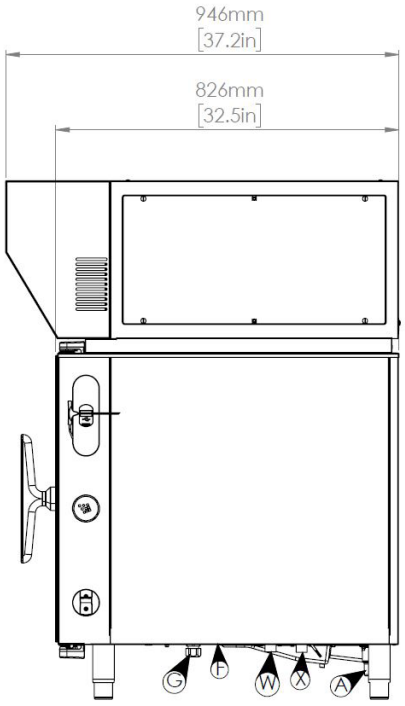

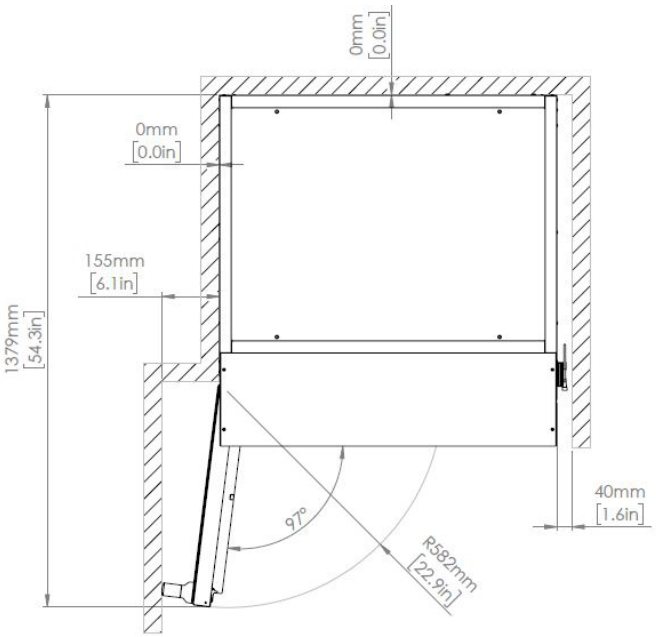

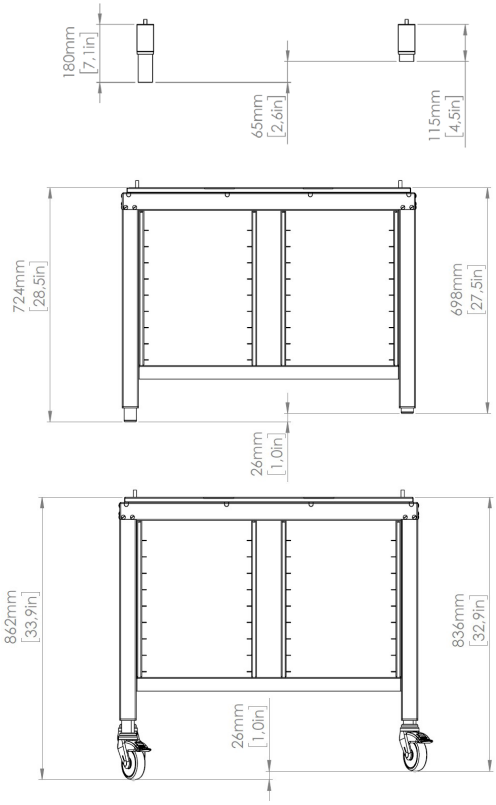

Notes to drawings:
400 mm / 15.75 inches spacing on right side of oven recommended for service access.
Stand shown in standard and extended lengths.

Electricity

Invoq Combi 6-1/1 + 6/1-1 GN
Invoq Hybrid 6-1/1 + 6/1-1 GN
Invoq Bake 6 + 6 400x600 EN

Dimensions & weight

Dimensions incl. handle and stand (HxWxD) [mm/inch]	2144 x 937 x 1032 / 84.4 x 36.9 x 40.6
Shipping dimensions (HxWxD) [mm/inch]	2250 x 1000 x 1200 / 88.6 x 39.4 x 47.2
Net weight [kg/lbs]	430 / 948
Net weight addition for Hybrid 6-1/1 GN [kg/lbs]	18 / 40
Shipping weight [kg/lbs]	450 / 993
Clearance (left, back, right) [mm/inch]	0 x 0 x 40 / 0 x 0 x 1.6
Maximum working height [mm/inch] basic stand	1598 / 62.8

Power requirements

	Top oven	Bottom oven
Power consumption [kW]	10.3	10.3
Convection output [kW]	9	9
Grid supply frequency [Hz]	60	60
Voltage 208 V 3Ph AC		
Amperage [A]	31	31
RCD model	B/F	B/F
Voltage 240 V 3Ph AC		
Amperage [A]	28	28
RCD model	B/F	B/F
Voltage 440 V 3Ph AC		
Amperage [A]	18	18
RCD model	B/F	B/F
Voltage 480 V 3Ph AC		
Amperage [A]	17	17
RCD model	B/F	B/F

Hood power requirements

Voltage 230 V 1Ph AC	Condensation	Hoodini
Power consumption [kW]	0.36	3.0
Amperage [A]	5	20

Water requirements

Water connection [inches]	3/4
Drain [mm]	Ø50
Water pressure (min-max) [bar]	1-6
Water flow [l/m]	5.5

Heat emission

Latent heat load [kW]	0.39
Sensible heat output [kW]	1.71

Noise emission

Noise level without hood system [dB(A)]	<65
Noise level with hood system [dB(A)]	<65

IP classification

IPX5

IP class	IPX5

Data

Wi-Fi module	IEEE 802.11 b/g/n (2.4 GHz)
LAN	RJ45

This appliance uses a variable frequency drive, which can be known to product high frequency electrical noise. In some cases units must be hard wired. This avoids false positives on ground fault devices susceptible to errors from electrical noise. All installations must comply with local and national codes.
Further technical information can be found in the installation manual.

A	Drain outlet
B	Air outlet (drain)
C	Air intake
F	Ethernet connection
G	Electrical connection
W	Water inlet (filtered or unfiltered water)
X	Water inlet

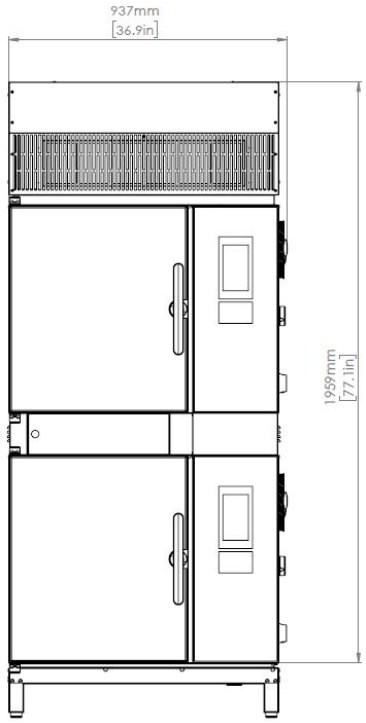

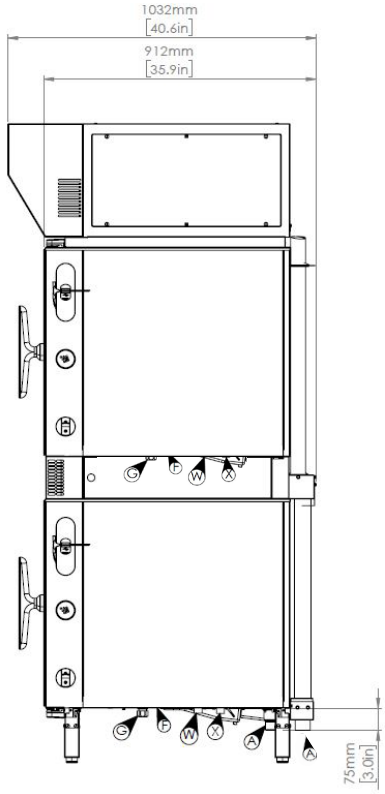

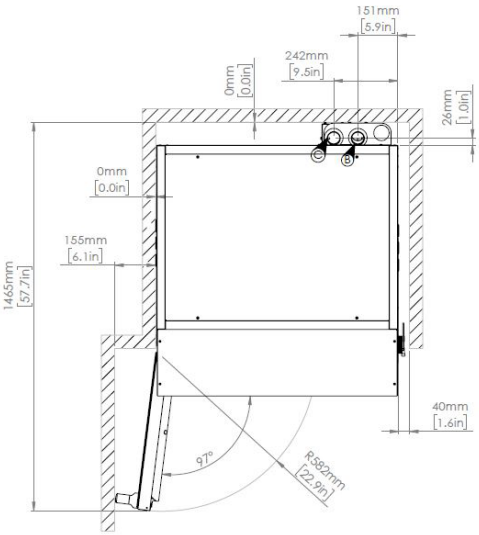

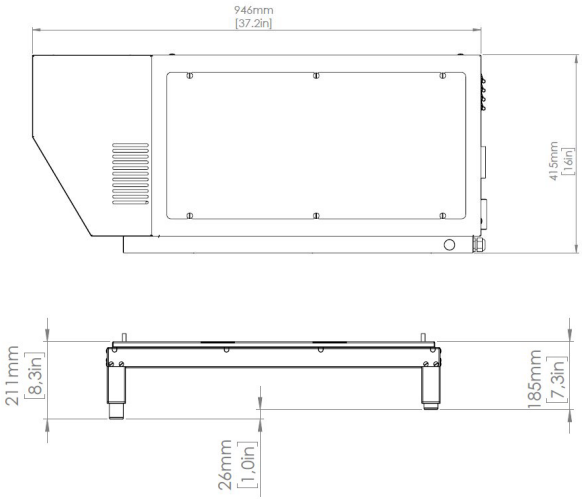

Notes to drawings:
400 mm / 15.75 inches spacing on right side of oven recommended for service access.
Stand shown in standard and extended lengths.

Electricity

Invoq Combi 10-1/1 GN
Invoq Hybrid 10-1/1 GN
Invoq Bake 9 400x600 EN

Dimensions & weight

Dimensions incl. handle (HxWxD) [mm/inch]	1346 x 937 x 946 / 53.0 x 36.9 x 37.2
Dimensions incl. handle and stand (HxWxD) [mm/inch]	2044 x 937 x 946 / 80.5 x 36.9 x 37.3
Shipping dimensions (HxWxD) [mm/inch]	1450 x 1000 x 1200 / 57.1 x 39.4 x 47.2
Net weight [kg/lbs]	243 / 536
Net weight addition for Hybrid 10-1/1 GN [kg/lbs]	8 / 18
Shipping weight [kg/lbs]	263 / 580
Clearance (left, back, right) [mm/inch]	0 x 0 x 40 / 0 x 0 x 1.6
Maximum working height [mm/inch] basic stand	1498 / 59.0

Power requirements

Power consumption [kW]	19.3
Convection output [kW]	18
Grid supply frequency [Hz]	60
Voltage 208 V 3Ph AC	
Amperage [A]	56
RCD model	B/F
Voltage 240 V 3Ph AC	
Amperage [A]	49
RCD model	B/F
Voltage 440 V 3Ph AC	
Amperage [A]	30
RCD model	B/F
Voltage 480 V 3Ph AC	
Amperage [A]	28
RCD model	B/F

Hood power requirements

Voltage 230 V 1Ph AC	Condensation	Hoodini
Power consumption [kW]	0.36	1.5
Amperage [A]	5	10

Water requirements

Water connection [inches]	3/4
Drain [mm]	Ø50
Water pressure (min-max) [bar]	1-6
Water flow [l/m]	5.5

Heat emission

Latent heat load [kW]	0.77
Sensible heat output [kW]	1.16

Noise emission

Noise level without hood system [dB(A)]	<65
Noise level with hood system [dB(A)]	<65

IP classification

IPX5

IP class	IPX5

Data

Wi-Fi module	IEEE 802.11 b/g/n (2.4 GHz)
LAN	RJ45

This appliance uses a variable frequency drive, which can be known to product high frequency electrical noise. In some cases units must be hard wired. This avoids false positives on ground fault devices susceptible to errors from electrical noise. All installations must comply with local and national codes.
Further technical information can be found in the installation manual.

A	Drain outlet
B	Air outlet (drain)
C	Air intake
F	Ethernet connection
G	Electrical connection
W	Water inlet (filtered or unfiltered water)
X	Water inlet

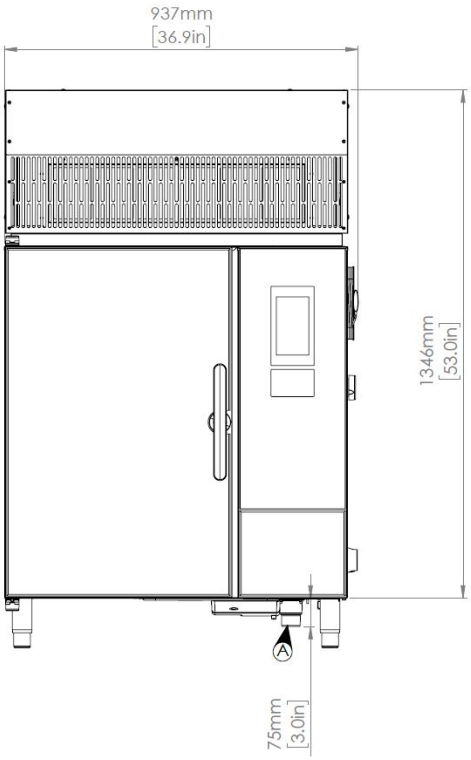

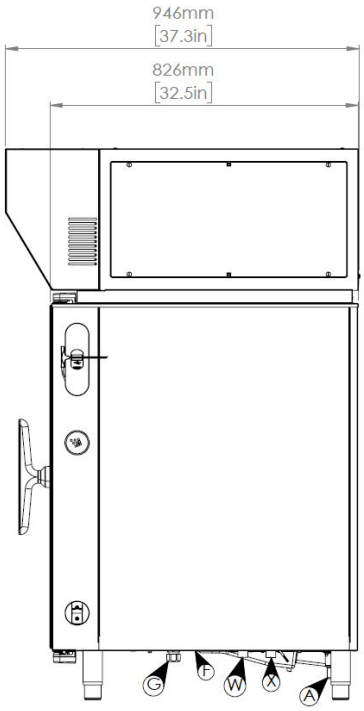

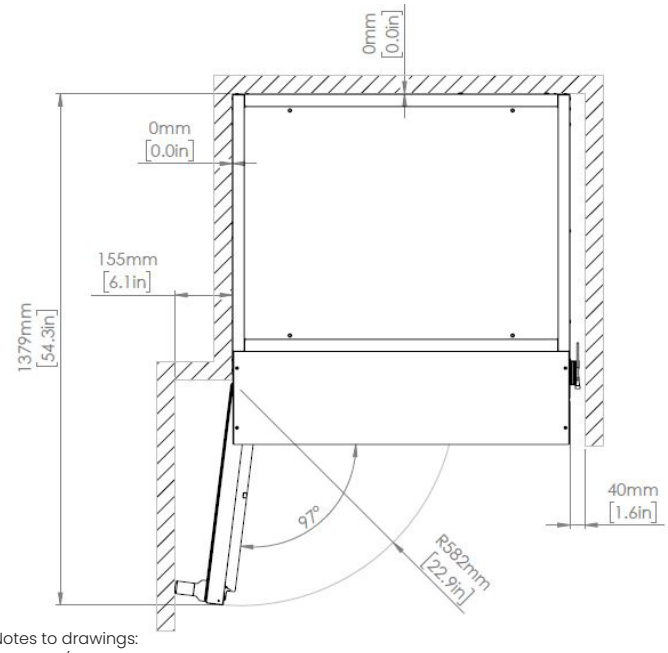

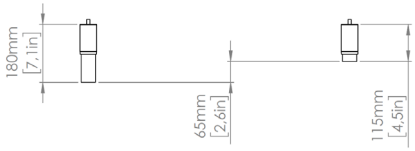

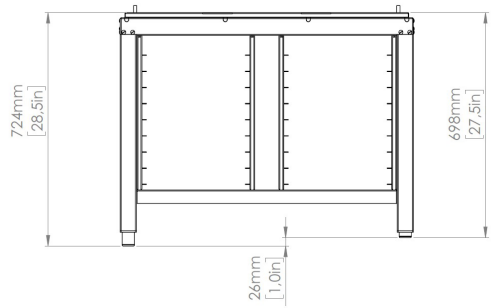

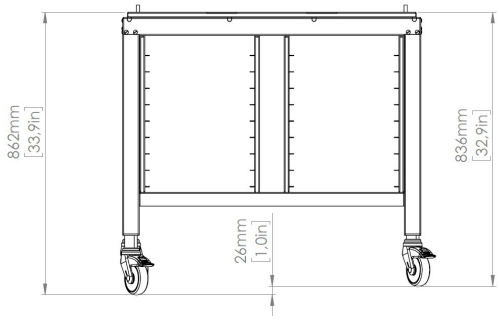

Notes to drawings:
400 mm / 15.75 inches spacing on right side of oven recommended for service access.
Stand shown in standard and extended lengths.

Electricity

Invoq Combi 10-1/1 + 6-1/1 GN
Invoq Hybrid 10-1/1 + 6-1/1 GN
Invoq Bake 9 + 6 400x600 EN

Dimensions & weight

Dimensions incl. handle and stand (HxWxD) [mm/inch]	2374 x 937 x 1032 / 93.5 x 36.9 x 40.6
Shipping dimensions (HxWxD) [mm/inch]	2500 x 1000 x 1200 / 98.4 x 39.4 x 47.2
Net weight [kg/lbs]	470 / 1037
Net weight addition for Hybrid 6-1/1 GN [kg/lbs]	9 / 20
Net weight addition for Hybrid 10-1/1 GN [kg/lbs]	8 / 18
Shipping weight [kg/lbs]	490 / 1081
Clearance (left, back, right) [mm/inch]	0 x 0 x 40 / 0 x 0 x 1.6
Maximum working height [mm/inch] basic stand	1828 / 72.0

Power requirements

	Top oven	Bottom oven
Power consumption [kW]	10.3	19.3
Convection output [kW]	9	18
Grid supply frequency [Hz]	60	60
Voltage 208 V 3Ph AC		
Amperage [A]	31	56
RCD model	B/F	B/F
Voltage 240 V 3Ph AC		
Amperage [A]	28	49
RCD model	B/F	B/F
Voltage 440 V 3Ph AC		
Amperage [A]	18	30
RCD model	B/F	B/F
Voltage 480 V 3Ph AC		
Amperage [A]	17	28
RCD model	B/F	B/F

Hood power requirements

Voltage 230 V 1Ph AC	Condensation	Hoodini
Power consumption [kW]	0.36	3.0
Amperage [A]	5	20

Water requirements

Water connection [inches]	3/4
Drain [mm]	Ø50
Water pressure (min-max) [bar]	1-6
Water flow [l/m]	5.5

Heat emission

Latent heat load [kW]	0.97
Sensible heat output [kW]	2.02

Noise emission

Noise level without hood system [dB(A)]	<65
Noise level with hood system [dB(A)]	<65

IP classification

IPX5

IP class	IPX5

Data

Wi-Fi module	IEEE 802.11 b/g/n (2.4 GHz)
LAN	RJ45

This appliance uses a variable frequency drive, which can be known to product high frequency electrical noise. In some cases units must be hard wired. This avoids false positives on ground fault devices susceptible to errors from electrical noise. All installations must comply with local and national codes.
Further technical information can be found in the installation manual.

A	Drain outlet
B	Air outlet (drain)
C	Air intake
F	Ethernet connection
G	Electrical connection
W	Water inlet (filtered or unfiltered water)
X	Water inlet

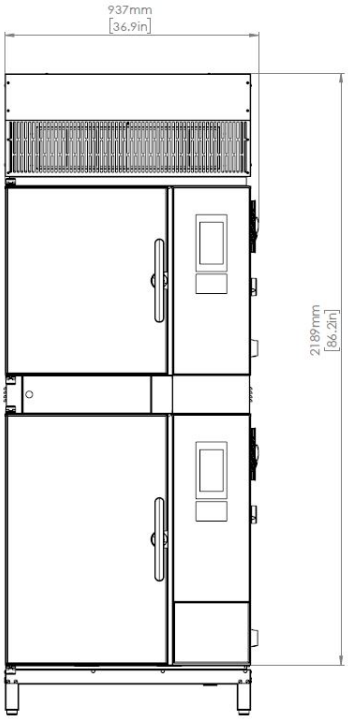

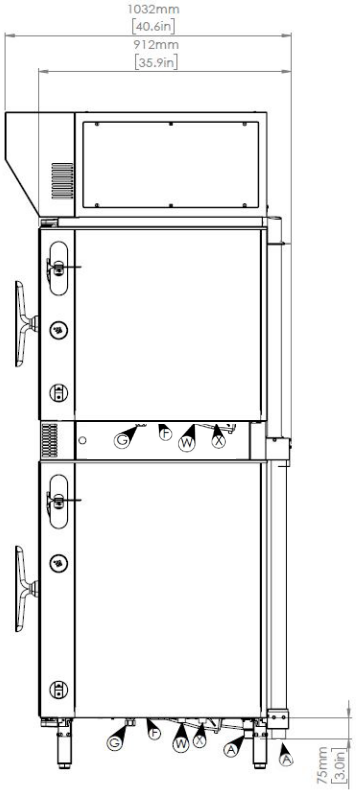

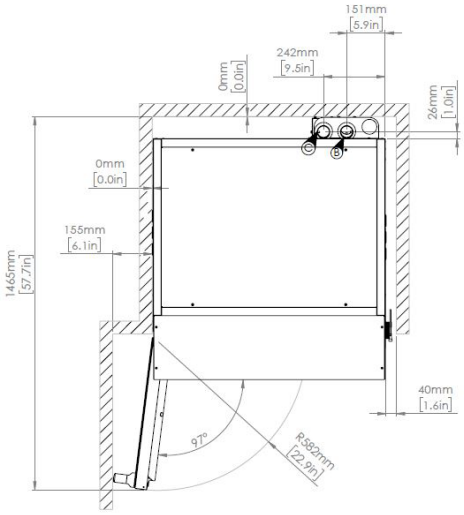

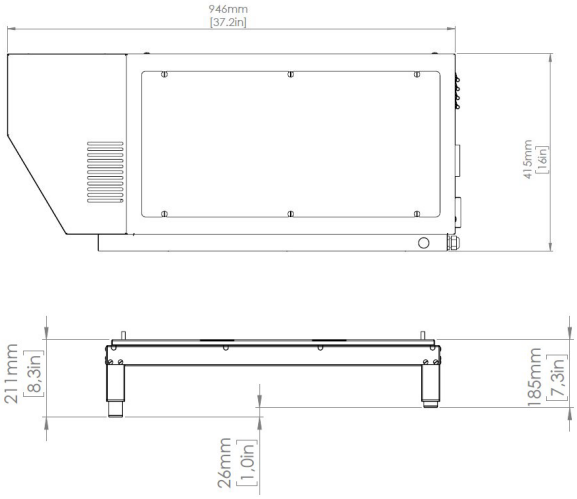

Notes to drawings:
400 mm / 15.75 inches spacing on right side of oven recommended for service access.
Foot shown in standard and extended lengths.

Electricity

Invoq Combi 20-1/1 GN
Invoq Hybrid 20-1/1 GN
Invoq Bake 16 400x600 EN

Dimensions & weight

Dimensions incl. handle and stand (HxWxD) [mm/inch]	2180 x 937 x 946 / 85.8 x 36.9 x 37.3
Shipping dimensions (HxWxD) [mm/inch]	2300 x 1000 x 1200 / 90.6 x 39.4 x 47.2
Net weight [kg/lbs]	352 / 776.0
Net weight addition for Hybrid 20-1/1 GN [kg]	14 / 31
Shipping weight [kg/lbs]	372 / 821
Clearance (left, back, right) [mm/inch]	0 x 0 x 40 / 0 x 0 x 1.6
Maximum working height [mm/inch] basic stand	1631 / 64.2

Power requirements

Power consumption [kW]	38.2
Convection output [kW]	36
Grid supply frequency [Hz]	60
Voltage 440 V 3Ph AC	
Amperage [A]	57
RCD model	B/F
Voltage 480 V 3Ph AC	
Amperage [A]	54
RCD model	B/F

Hood power requirements

Voltage 230 V 1Ph AC	Condensation	Hoodini
Power consumption [kW]	0.36	not available
Amperage [A]	5	not available

Water requirements

Water connection [inches]	3/4
Drain [mm]	Ø50
Water pressure (min-max) [bar]	1-6
Water flow [l/m]	5.5

Heat emission

Latent heat load [kW]	1.11
Sensible heat output [kW]	2.49

Noise emission

Noise level without hood system [dB(A)]	<65
Noise level with hood system [dB(A)]	<65

IP classification

IPX5

IP class	IPX5

Data

Wi-Fi module	IEEE 802.11 b/g/n (2.4 GHz)
LAN	RJ45

Hoodini is not an option for roll-in models.
This appliance uses a variable frequency drive, which can be known to product high frequency electrical noise. In some cases units must be hard wired. This avoids false positives on ground fault devices susceptible to errors from electrical noise. All installations must comply with local and national codes.
Further technical information can be found in the installation manual.

A	Drain outlet
B	Air outlet (drain)
C	Air intake
F	Ethernet connection
G	Electrical connection
W	Water inlet (filtered or unfiltered water)
X	Water inlet

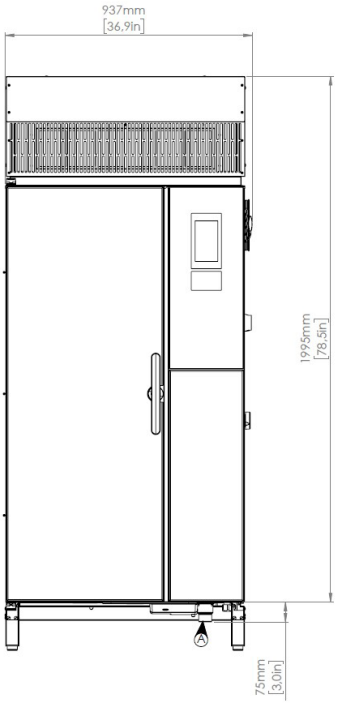

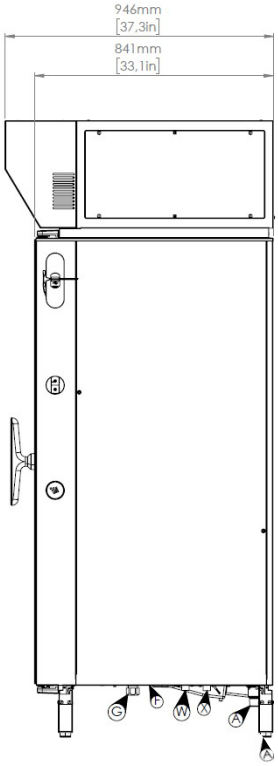

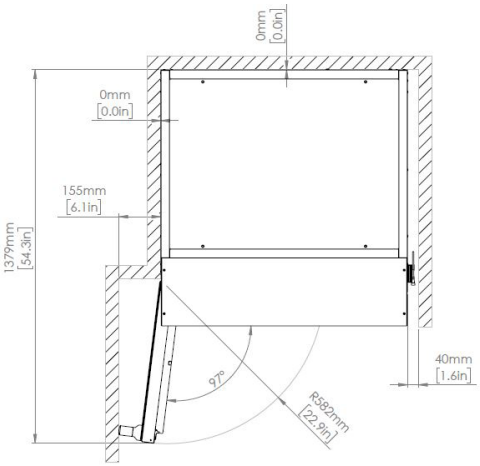

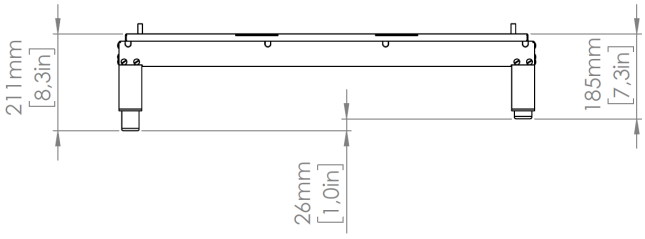

Notes to drawings:
400 mm / 15.75 inches spacing on right side of oven recommended for service access.
Foot shown in standard and extended lengths.

Features

Intelligence

ClimateControl	Optimal cooking environment through control of air, heat, pressure and humidity levels. Reversible fan adjustable with 9 steps (20-100%). Humidity correction accurate to 1/10 of a second.
CareCycle	Fully automatic, recirculating tablet-based cleaning system. System guidance to appropriate cleaning program and required amount of detergent. Organizer to schedule a carefree overnight clean. Automatic rinse after interrupted cleaning cycle.
MenuPlanner	Up to 10 integrated timers for notifications. Software to input and group recipes with drag and drop functionality. Automatic alert to request staggering of loading when grouping up to three specific recipes.
CookTimeCorrection (CTC)	Intelligent sensors detecting unexpected changes in temperature and compensating accordingly.
SmartChef	Intelligent cooking automation selecting the optimal cooking settings.
Humidity control, CombiSense	Percentage-based automatic humidity system for high-temperature cooking maintaining natural moisture, flavor and color of the product. Sensors supervise and control the Maillard reaction for accurate results.
Humidity control, CombiSpeed	Level-controlled humidity injection for improving low-temperature cooking optimizing tenderization and yield of larger products. 10 different humidity levels.
QSR	QSR, Quick Select Recipes, is a tailored smart user interface allowing recipes as favorites on the home screen. 9 thumbnail recipes per page - up to 9 pages for a total of 81 recipes. Option of locked down user interface to prevent manual operation.
Connectivity, Open Kitchen	Cloud solution for menu management, recipe distribution, preventive maintenance, real-time overview of fleet, food safety documentation and consumption data overview.
Power failure	Automatic restart after power failure allowed up to 30 minutes to ensure finalization of running programs. Automatic rinse after interrupted cleaning process for safe cooking. User notification of failure occurred and documents via HACCP.

Operation

Convection, temperature range	30-300°C / 85°-572°F 300°C / 572°F possible for 15 minutes, then reducing to 250°C / 480°F for continued run in manual mode.
Steam, temperature range	30-130°C / 85°-265°F HybridSteam combining steam generator and injection for rapid and pure steam for optimal performance even at low temperatures below 100°C / 212°F.
CombiSense, temperature range	30-250°C / 85°-480°F Accurate automatic humidity adjustment.
CombiSpeed, temperature range	30-250°C / 85-480°F CombiSpeed: Power steam adjustable in 10 levels for reduced cooking time and tenderizing products.
Cool down	Rapid cool down function with possibility for doing it with the door open or by use of water.
Proofing	Humidity regulated proofing function for optimum proofing of baked products

Operation

InjectionSteam	In steaming mode, steam is generated by injecting water directly on to the heating elements and circulating it with the fan creating fast and efficient steam.
Steam on demand	Push and hold in manual mode or push and select between 1-30 seconds.
Steam on demand in recipes	Programmable steam on demand between 1-30 seconds. Pause can be added between steps for optimal crust.
Recipes	The oven can hold 1,500 recipes. Each recipe can hold up to 15 different steps. A set of preset recipes are installed on the oven from factory. Recipes can be grouped, e.g. bakery products, Italian cuisine. Choose from icons or photos, available from a preinstalled library, or upload own images. Simple upload or transfer between Invoq ovens via USB or the cloud solution.
Delta-T	Cooking method based on the product's core temperature for gentle preparation tenderizing meat and reducing shrinkage.
Cook & Hold	Cooking method using Delta-T as cooking mode until just before the desired temperature is reached after which the temperature is maintained, while automatic humidity control ensures the optimal conditions with a high moisture level and minimum shrinkage.
Temperature probe	External multipoint core temperature probe with accurate sensors. Always at ambient temperature. for easy use. Less exposed to wear and tear.
Temperature probe	External multipoint core temperature probe with accurate sensors. Always at ambient temperature. for easy use. Less exposed to wear and tear.

Safety

Fan wheel brake	Rapid fan stop.
Overheat protection	Overheating protection for convection heat and steam generator.
Contact temperature	Maximum contact temperature of oven door 70°C / 158°F.
3-pane glass door	Swiveling glass panes with built-in ventilation and energy-optimized coating.
Tablet cleaner and descaler	Tablet-based environmentally conscious cleaner and descaling chemicals for improved work safety.
HACCP	HACCP files are automatically stored for 60 days and can be downloaded in PDF format to ensure food safety documentation. Stored on the oven when not connected. HACCP data includes production time, production duration, preparation temperature and core temperature.
Maximum rack height	Maximum working height of 1.6 m / 63 inches.
Display lock	Ensuring no interruption with operation when cleaning the surface.
IP protection	Protection class IPX5 protecting against water jets from all directions.
Door handle	Two-step safety handle as standard.
Cavity	304/DIN 1.4301 steel with seamless welding and rounded corners for optimal airflow and cleaning.

Network

USB	Integrated USB interface for software, recipe and HACCP handling.
LAN	Ethernet interface for wired connectivity to Open Kitchen.
Wi-Fi	WLAN upgrade for wireless connectivity to Open Kitchen.
Connectivity	Open Kitchen cloud-based system enabling management of oven fleet and general facility management.

Care

CareCycle	Fully automatic, recirculating tablet-based cleaning system with 7 cycles from Light to Intense, Turbo or Eco. Pressure-dependent system. Turbo cleaning in just 15 minutes. System guidance to appropriate cleaning program and required amount of detergent. Organizer to schedule a carefree overnight clean. Automatic rinse after interrupted cleaning cycle ensuring no chemical residue left in the chamber.
CareCycle Clean tablets	Phosphate-free formula of the detergent for an eco-conscious choice
CareCycle Descale tablets	Descaling of boiler unit and/or cavity for proper cleaning of hard water deposits.
Water filter	For specific guidelines, follow Blodgett Combi's water treatment documentation.
3-pane glass door	Swiveling glass panes for easy cleaning.
Hand shower	Hand shower can be mounted on the side, with separate closing mechanism. The external hand shower is designed with focus on ergonomics and work environment.
External	Easy external clean due to stainless steel and glass surfaces and IPX5 protection.
Connectivity	Monitoring and consumption overview via the Open Kitchen cloud solution.

Comfort

Time format	Adjustable in 24-hour format or am/pm.
Timer start	Customizable automatic timer starts. Allowing the oven to start and/or preheat unsupervised.
Timer modes	HH:MM - MM:SS - continuous time
Display	Digital temperature display adjustable in °C or °F, display of target and actual values.
Fan speed	1 or 2 fan wheels. Reversible fan ensuring uniform results. Optimum distribution of air and steam in oven chamber. Adjustable fan with 9 steps (20-100%); low fan speed - ideal for light/delicate products The fan can be set manually in convection, steaming and combi mode. In all other modes, the fan function is set automatically.
Lighting	LED lighting from the door with high illumination of cooking chamber. Energy saving and long life.
Touch display	Fast reacting and intuitive touch display for smooth and easy operation.
User interface	Capacitive 7" TFT color touch screen with super wide view for optimal viewing angles. Simple and intuitive operation by self explanatory symbols and guidance eases the operation like a smartphone, operated by Android 9. Compatible with Middleby UI for multi devices with same control.
Languages	27 languages preset for operation and trouble shooting.
Cooking methods	7 operating modes and/or 5 cooking modes.
Supervision access	View or change the operating mode.
Customization	Customize the home screen to allow easier access to favorites, cleaning and MenuPlanner removing the risk of operator errors. Customize notes with alarms to guide staff. Incorporate guidelines to recipes for optimal usage and elimination of errors.

Installation, maintenance & environment

Start widget	Correct and stress-free installation incl. location (sea level) customization.
Service widget	Correct and easy maintenance incl service diagnosis and self-test functionality.
Fitting	Left- or right-hinged door for optimal ergonomics and kitchen design.
Service access	Easy service access from one side of the oven only. 400 mm / 15.75 inches spacing on right side of oven recommended for service access.
Water filtration	Water treatment is recommended for optimal operation. User notification by oven for replacement.
Solenoid valves	This appliance has backflow prevention on the solenoid valves.
Drain	The drain piping must consist of temperature resistant material, greater than 160°F, and be of adequate diameter not to cause flow restriction. Improper materials may deform and cause restrictions, thus affecting performance. Appliance is to be installed with backflow protection in accordance with federal, state or local codes.
Connectivity	Remote diagnosis and updates with Open Kitchen.
Warranty	Standard warranty or extended according to purchase agreement with distributor.
Maintenance	Regular maintenance is recommended according to the manufacturer's guideline by trained service partners.
Energy efficiency	Tested in accordance with ENERGY STAR.
Ambient temperature	Minimum 5°C (41°F) - Maximum 50°C (120°F) ambient operation temperature.

Mix to match your needs

Mix oven models	Invoq Combi Invoq Hybrid Invoq Bake
Mix oven sizes	6-1/1 + 6-1/1* 10-1/1 + 6-1/1* 6 400x600 EN + 6 400x600 EN* 9 400 x 600 EN + 6 400x600 EN* **Also possible with PassThrough models upon request, factory-built.*
Choose power supply	Electric + electric Gas + gas Electric + gas Gas + electric
Mix steaming technology	CombiSteam + CombiSteam HybridSteam + HybridSteam CombiSteam + HybridSteam
Matching standard hood requirements	Any Stackit solution has a total height below 2 meter and will fit under a standard hood system.
Add Drain Lift System	Drain Lift System can be added as an option to any Stackit solution, ensuring the efficient removal of wastewater into a wall-mounted drain.

Further technical information can be found in the individual oven model spec sheet and the installation manual.

Invoo Hood/IGN

Options

	Item number
Right-hinged door 1/1 GN (upon request)	-
Fat Separation System 1/1 GN + EN (factory-built)	104853
Condensation hood Stackit 1/1 GN (electric oven)	108113
Stackit 1/1 GN (electric oven)	107800
Stackit 1/1 GN (gas oven)	107801
Marine kit 6 & 10 - 1/1 & 2/1 GN	108117
Special voltage (upon request)	-
Wi-Fi module	108137
Open Kitchen cloud solution	-
Drain lift system, stacked oven, factory installed	110890
Drain lift system, stacked oven, upgrade kit	110892

Racks

	Item number
6-1/1 GN 70mm 7 trays U-shaped	107841
6-1/1 GN 85mm 6 trays U-shaped	107842
6-1/1 GN MultiRack (1/1 GN - 400x600 - US full sheet pans) - 100mm 5 trays	107840
6 - 400x600 EN - 80mm 6 trays L-shaped	107838
6 - 400x600 EN - 95mm 5 trays L-shaped	107839
10-1/1 GN 70mm 10 trays U-shaped	107847
10-1/1 GN 85mm 8 trays U-shaped	107848
10-1/1 GN MultiRack (1/1 GN - 400x600 - US full sheet pans) - 100 mm 8 trays	107846
9 - 400x600 EN - 80mm 9 trays L-shaped	107844
9 - 400x600 EN - 95mm 8 trays L-shaped	107845

Trolleys

	Item number
Roll-in trolley 20-1/1 GN 65 mm 20 trays U-shaped	107592
Roll-in trolley 20-1/1 GN 85 mm 15 trays U-shaped	108140
Roll-in trolley 16 EN - 400x600 80 mm 16 trays L-shaped	107591
Roll-in trolley 16 EN - 400x600 95 mm 14 trays L-shaped	108148
Banquetting roll-in trolley 20-1/1 GN (50 plates)	108142
Options for trolleys:	
Thermo cover (1/1 GN)	108149
Holder for trolley handle	108144

Stands

Stand for table & Stackit 1/1 GN + EN
Options for stand (add-on):
Castors (set of four incl. lock mechanism)

CareCycle

	Item number
CareCycle Clean tablets	106032
CareCycle Descale tablets	106033

Accessories

	Item number
Heat shield 6-1/1 GN	108120
Heat shield 10-1/1 GN	108121
Heat shield 20-1/1 GN	108124
USB key	108128
IEMS energy management system	108119

This appliance is intended for use in professional and commercial kitchens.
The company reserves the right to make substitutions of components without prior notice.

GET IN TOUCH.

As your oven specialist, we always do our utmost to help our customers. Worldwide.

Blodgett
42 Allen Martin Drive
Essex Junction, VT 05452
USA

T: 802-658-6600
M: custserv@blodgett.com

www.blodgett-combi.com

Part of MIDDLEBY