HV-100E & HV-100E-AB
HYDROVECTION OVENS
REPLACEMENT PARTS LIST

HV-100E

SERIAL LETTER CODE "KE OR KC" (*manufactured on or before 1/20/2017)*

See pages 4 - 16

HV-100E-AB

SERIAL LETTER CODE "KL" (*manufactured after 1/20/2017)*

See pages 17 - 28

EFFECTIVE AUGUST 17, 2021

Superseding All Previous Parts Lists.
The Company reserves the right to make substitution in the event that items specified are not available.
ERRORS: Descriptive and/or typographic errors are subject to correction.

BLODGETT OVEN COMPANY
42 Allen Martin Drive, Essex Junction, Vermont 05452 USA Telephone: (802) 658-6600 Fax: (802) 860-3732
www.blodgett.com

P/N 53055 Rev AH

SERIAL NUMBER LOCATION / KEY:

IMPORTANT: When ordering parts, please provide the model, gas type and serial number of the oven. The identification plate is located on the back of the oven.

SERIAL NUMBER IDENTIFICATION CODE:

KE OR KC = HV-100E HYDROVECTION OVEN

KL = HV-100E-AB HYDROVECTION OVEN

SERIAL NUMBER EXAMPLES

071909KC001

07/19/09 = DATE

KC = LETTER CODE FOR HV-100E

001 = FACTORY SEQUENCE

TABLE OF CONTENTS

HV-100E OVENS - SERIAL LETTER CODE "KE" OR "KC"

MANUAL CONTROLS 4
MENUSELECT CONTROLS 5
TOUCHSCREEN CONTROLS 6
DOORS 8
INTERIOR COMPONENTS 10
MOTOR 13
ELECTRICAL PANEL 14
EXTERIOR COMPONENTS 16

HV-100E-AB OVENS - SERIAL LETTER CODE "KL"

SMARTTOUCH CONTROL 18
SMARTTOUCH 2 CONTROL 19
MANUAL CONTROL 20
PROGRAMMABLE MANUAL CONTROL 21
DOORS 22
INTERIOR COMPONENTS 23
REAR COMPONENTS 24
MOTOR ASSEMBLY 25
EXTERIOR COMPONENTS 26
ELECTRICAL COMPONENTS 27
ELEMENT COMPONENTS 28

HV-100E & HV-100E-AB OVENS

ACCESSORIES 30

HV-100E OVENS

SERIAL LETTER CODE "KE" OR "KC"

(All Full Size Hydrovection ovens manufactured on or before 1/25/2017)

MANUAL CONTROLS

FOR HV-100E OVENS (MANUFACTURED BEFORE 1/20/2017)

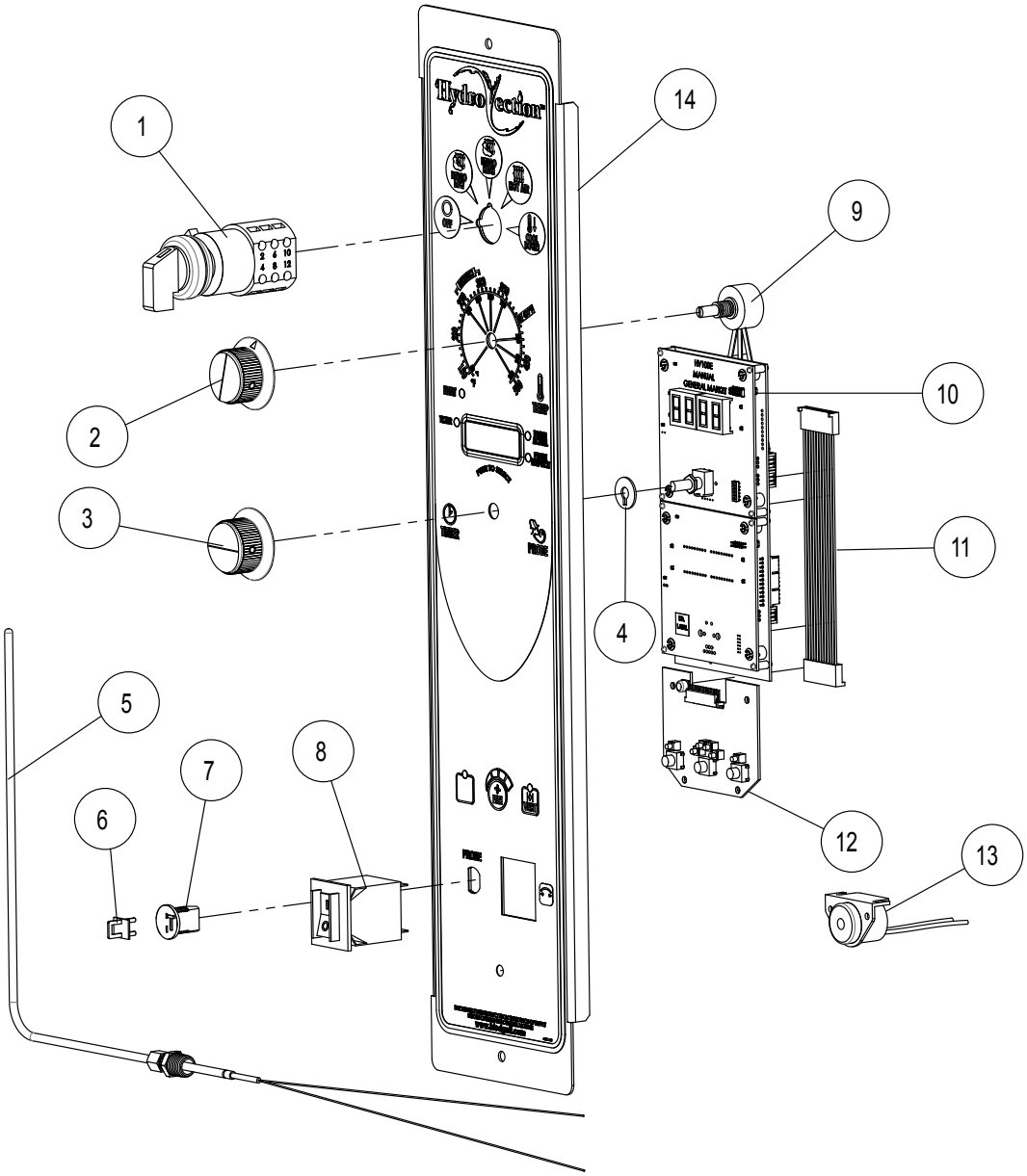

For HV-100E Ovens (Serial Letter Code KE or KC)

Ref. No.	Part No.	Description
1	52466	ROTARY SWITCH, 5 POSITION
2	36616	KNOB W/ARROW
3	36617	KNOB W/O ARROW
4	54340	SPACER, ENCODER SUPPORT
5	53007	CAVITY PROBE
6	39782	MEAT PROBE JACK PLUG
7	39781	MEAT PROBE JACK
8	39688	CIRCUIT BREAKER, 20A
9	18234	POTENTIOMETER
10	53400	PROGRAMMED CONTROL, HV100E MANUAL
11	53344	HARNESS, CONTROL CONNECTOR
12	53157	BOARD, 3 BUTTON HYDRO MANUAL
13	53759	REMOTE BUZZER
	54075	COMMUNICATION CABLE
14	58538	PANEL & DECAL W/O HOSE REEL (OVENS AFTER 10-6-11)
	58543	PANEL & DECAL W HOSE REEL (OVENS BEFORE 10-6-11)

MENUSELECT™ CONTROLS

FOR HV-100E OVENS (MANUFACTURED BEFORE 1/20/2017)

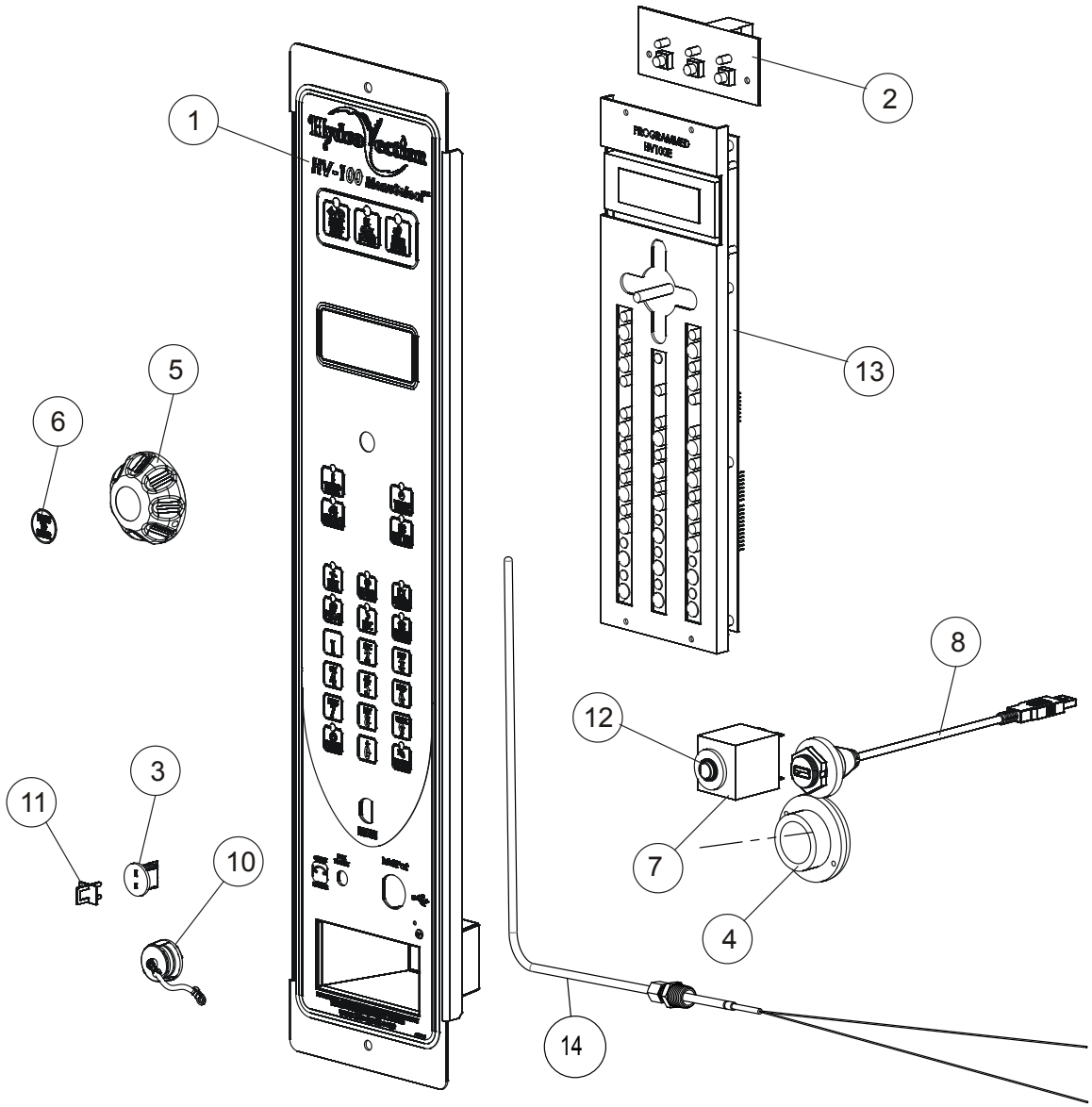

For HV-100E Ovens (Serial Letter Code KE or KC)

Ref. No.	Part No.	Description
1	53003	PANEL & DECAL FOR MODELS W/ HOSE REEL AS SHOWN (OVENS BEFORE 10-6-11)
	58539	PANEL & DECAL FOR MODELS W/O HOSE REEL (OVENS AFTER 10-6-11)
2	39122	BOARD, 3 BUTTON PCB
3	39781	MEAT PROBE JACK
4	52402	HOSE REEL GROMMET
5	51372	KNOB, XCEL
6	50986	DECAL, PRESS TO ENTER
7	52185	CIRCUIT BREAKER, PUSH BUTTON STYLE
	39688	CIRCUIT BREAKER, ROCKER STYLE
8	52647	USB CABLE
10	52161	COVER, USB
11	39782	MEAT PROBE JACK PLUG
12	52233	SPACER, CURCUIT BREAKER
13	53384	PROGRAMMED CONTROL, HV100E KNOB
	36376	SWITCH, HEAT CUT-OFF
	53759	REMOTE BUZZER
	54073	CUMMUNICATION CABLE
14	53007	CAVITY PROBE

TOUCHSCREEN CONTROL

FOR HV-100E OVENS (MANUFACTURED BEFORE 1/20/2017)

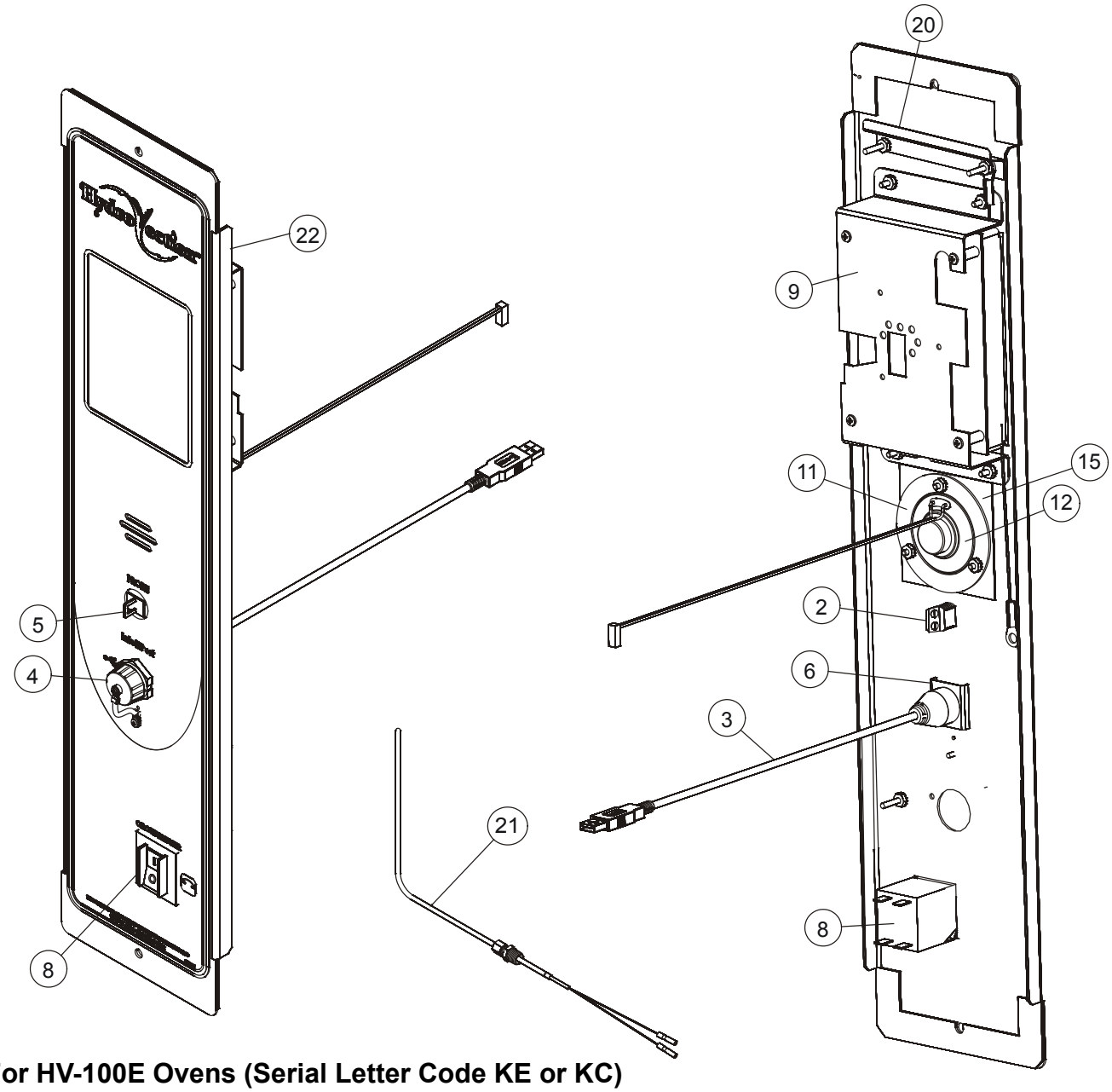

For HV-100E Ovens (Serial Letter Code KE or KC)

Ref. No.	Part No.	Description
2	39781	MEAT PROBE JACK
3	52160	USB CABLE
4	52161	COVER, USB
5	39782	MEAT PROBE JACK PLUG
6	52600	SPACER, USB PORT
8	39688	CIRCUIT BREAKER, 20A
9	55162	CONTROL, TOUCH SCREEN, BEFORE 11/8/13
	57735	CONTROL, TOUCH SCREEN, AFTER 11/8/13
	57732	CONTROL, TOUCH SCREEN, DUNKIN DONUTS
	58766	CONTROL, TOUCHSCREEN, LUCILLE'S
11	59616	SPEAKER RETAINER
12	59777	SPEAKER KIT, W/RETAINERS
15	54440	SPEAKER COVER
20	52806	DEFLECTOR, CONTROL PANEL DRIP
21	53007	CAVITY PROBE
	54330	COMMUNICATIONS CABLE
22	58540	PANEL & DECAL

DOORS

STAINLESS STEEL

FOR HV-100E OVENS (MANUFACTURED BEFORE 1/20/2017)

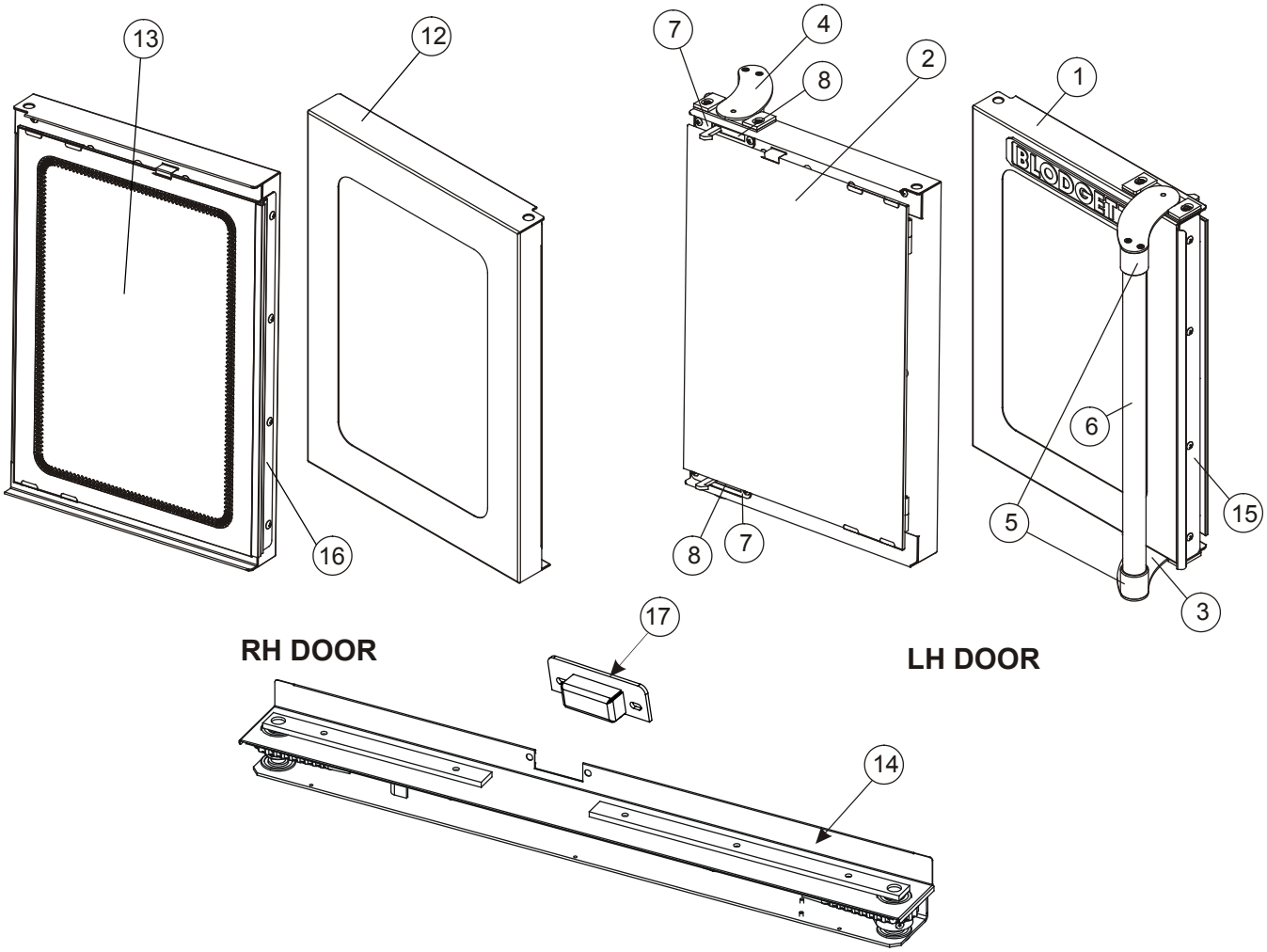

For HV-100E Ovens (Serial Letter Code KE or KC)

Ref. No.	Part No.	Description
1	56762	ASSEMBLY, LH OUTER DOOR, WITH BLACK BORDER ON GLASS
	53825	ASSEMBLY, LH OUTER DOOR WITH RED BORDER ON GLASS
2	51534	ASSEMBLY, LH INNER DOOR GLASS WITH BLACK BORDER ON GLASS
	53827	ASSEMBLY, LH INNER DOOR GLASS WITH RED BORDER ON GLASS
3	57016	ASSY, LATCH RH
4	57015	ASSY, LATCH LH
5	50213	END CAP, HANDLE
6	51542	ASSEMBLY, DOOR HANDLE
7	51539	PLATE, LATCH COVER
8	51668	GASKET, DOOR LATCH

Ref. No.	Part No.	Description
12	56766	ASSEMBLY, RH OUTER DOOR, WITH BLACK BORDER ON GLASS
	53826	ASSEMBLY, RH OUTER DOOR, WITH RED BORDER ON GLASS
13	51556	ASSEMBLY, RH INNER DOOR GLASS WITH BLACK BORDER ON GLASS
	53828	ASSEMBLY, RH INNER DOOR GLASS WITH REDBORDER ON GLASS
14	57953	DOOR TURNBUCKLE ASSEMBLY
	52514	DOOR SWITCH ASSEMBLY
15	51450	LH DOOR CENTER CHANNEL
16	51610	RH DOOR CENTER GASKET
	51631	RUBBER BUMPER (PUSH IN STYLE)
	60185	BUMPER (SCREW IN STYLE)
17	57889	CATCH LATCH ASSEMBLY

DOORS

BLACK GLASS

FOR HV-100E OVENS (MANUFACTURED BEFORE 1/20/2017)

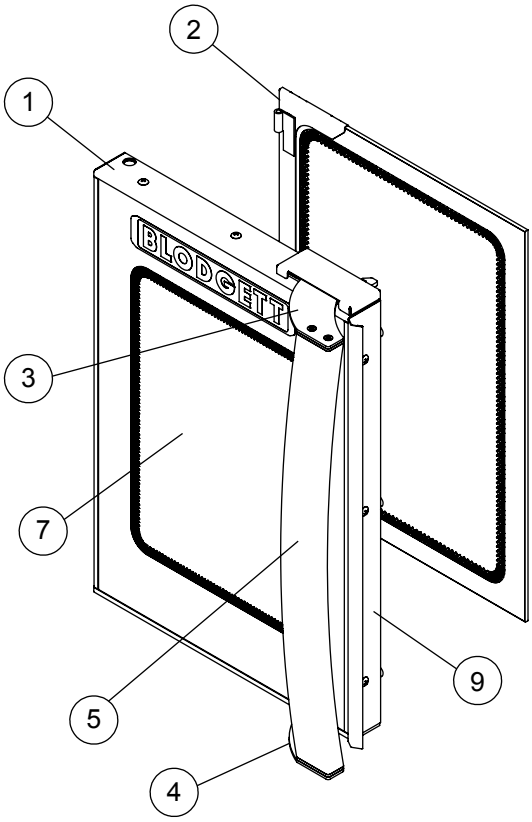

LH DOOR

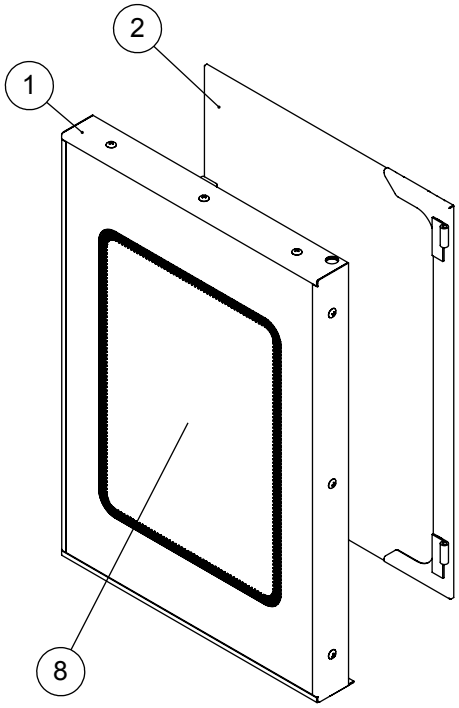

RH DOOR

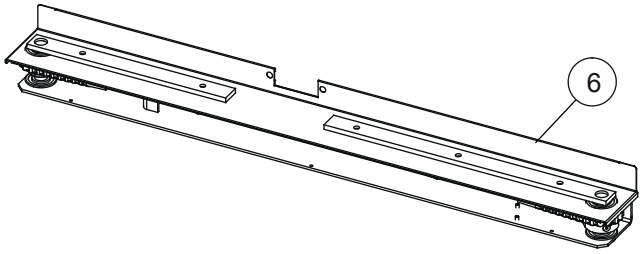

For HV-100E Ovens (Serial Letter Code KE or KC)

Ref. No.	Part No.	Description
1	55528	LH OUTER DOOR (COMPLETE AS SHOWN)
1	55542	RH OUT DOOR (COMPLETE AS SHOWN)
2	51534	LH INNER GLASS
	51556	RH INNER GLASS
3	58939	LATCH ASSY, RECT, LH
4	58938	LATCH ASSY, RECT, RH
5	55608	DOOR HANDLE
6	57953	DOOR TURNBUCKLE
	52514	DOOR SWITCH
7	55531	LH FRONT GLASS
8	55532	RH FRONT GLASS
9	55533	CENTER TRIM
	51610	CENTER DOOR GASKET
	60185	BUMPER (SCREW IN STYLE)
	51519	CLIP, DOOR GLASS

INTERIOR COMPONENTS - FRONT VIEW

FOR HV-100E OVENS (MANUFACTURED BEFORE 1/20/2017)

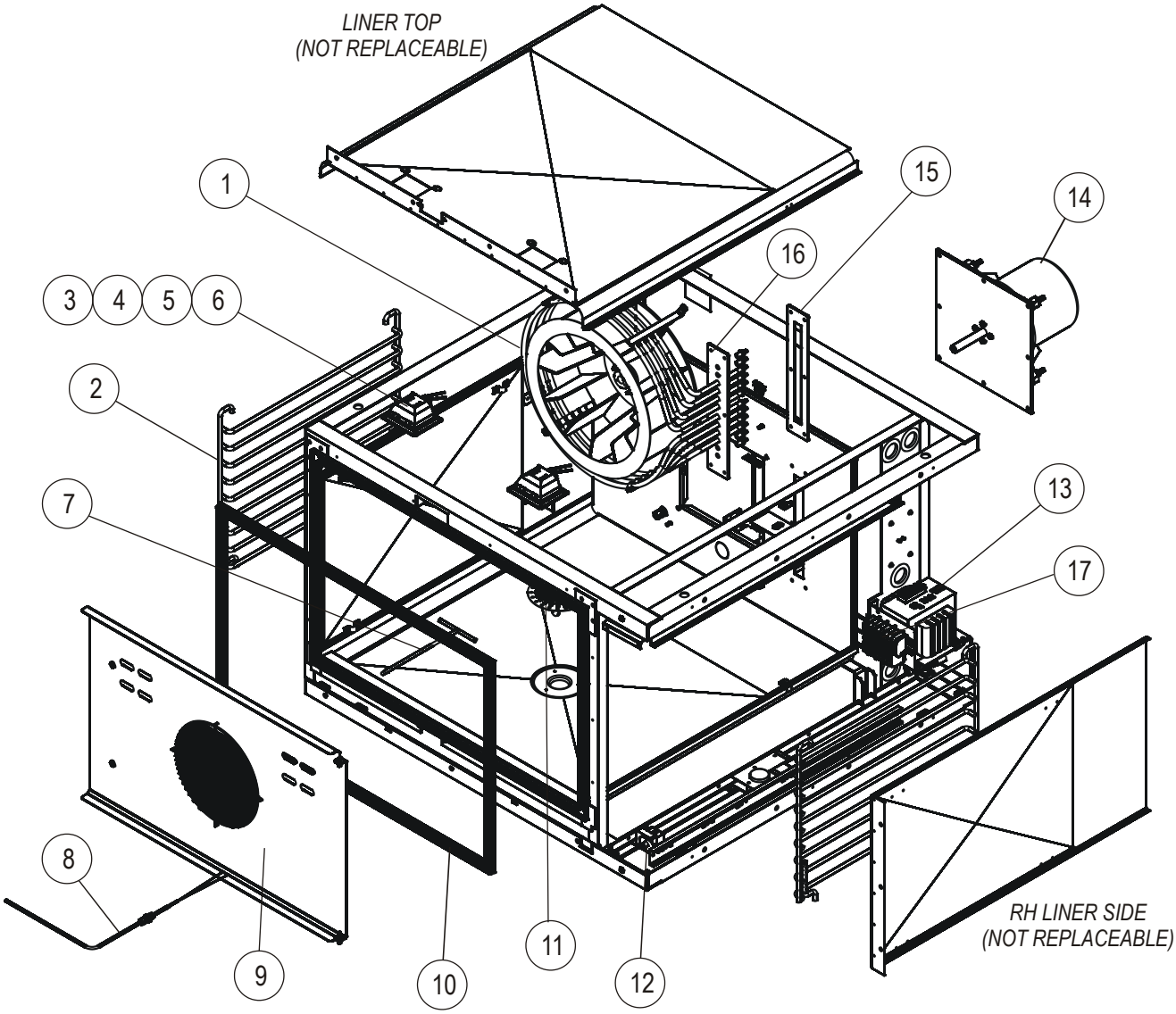

INTERIOR COMPONENTS - FRONT VIEW

FOR HV-100E OVENS (MANUFACTURED BEFORE 1/20/2017)

For HV-100E Ovens (Serial Letter Code KE or KC)

Ref. No.	Part No.	Description
1	52958	BLOWER WHEEL WITH KEY\ (BEFORE 6/21/12)
1	55303	BLOWER WHEEL WITH KEY\ (AFTER 6/21/12)
2	54856	SIDE RACK SUPPORT (SET OF 2)
	59046	WIRE RACK
3	D0128	LIGHT BULB FOR SQUARE LIGHT, TYPE G4 .16" BETWEEN PINS
	57075	LIGHT BULB FOR SQUARE LIGHT, TYPE G5.3 .21" BETWEEN PINS
	53101	LIGHT BULB FOR ROUND LIGHT
4	50192	GLASS FOR SQUARE LIGHT
5	D0127	GASKET FOR SQUARE LIGHT
6	D0125	BEZEL FOR SQUARE LIGHT
	53081	LENS & GASKETS FOR ROUND LIGHT
	57058	HOUSING, SOCKET AND BULB FOR SQUARE LIGHT
	53194	HOUSING, SOCKET AND BULB FOR ROUND LIGHT
7	52957	WATER INJECTION TUBE AND FITTING KIT (BEFORE 6/21/12)
8	53007	CAVITY TEMPERATURE PROBE AND FITTING KIT
9	52321	BAFFLE (BEFORE 6/21/12)
9	54863	BAFFLE (AFTER 6/21/12 & BEFORE 11/12/13)
9	57496	BAFFLE (AFTER 11/11/13
10	52716	PERIMETER GASKET
11	50506	DRAIN STRAINER
12	36441	HIGH LIMIT THERMOSTAT
13	51453	440-480V TRANSFORMER
14	39333	MOTOR ASSEMBLY (BEFORE 6/21/12)
14	54293	MOTOR ASSEMBLY (AFTER 6/21/12)
15	52304	ELEMENT GASKET
16	53280	14 kW, 208V ELEMENT ASSEMBLY AND GASKET KIT
16	53281	14 kW, 220/440V ELEMENT ASSEMBLY AND GASKET KIT
16	53282	14 kW, 240/480V ELEMENT ASSEMBLY AND GASKET KIT
17	39733	TERMINAL BLOCK
	53101	HALOGEN BULB, 12V 20W GY6 .35"
	58996	FRONT CAVITY VENT GASKET

INTERIOR COMPONENTS - REAR VIEW

FOR HV-100E OVENS (MANUFACTURED BEFORE 1/20/2017)

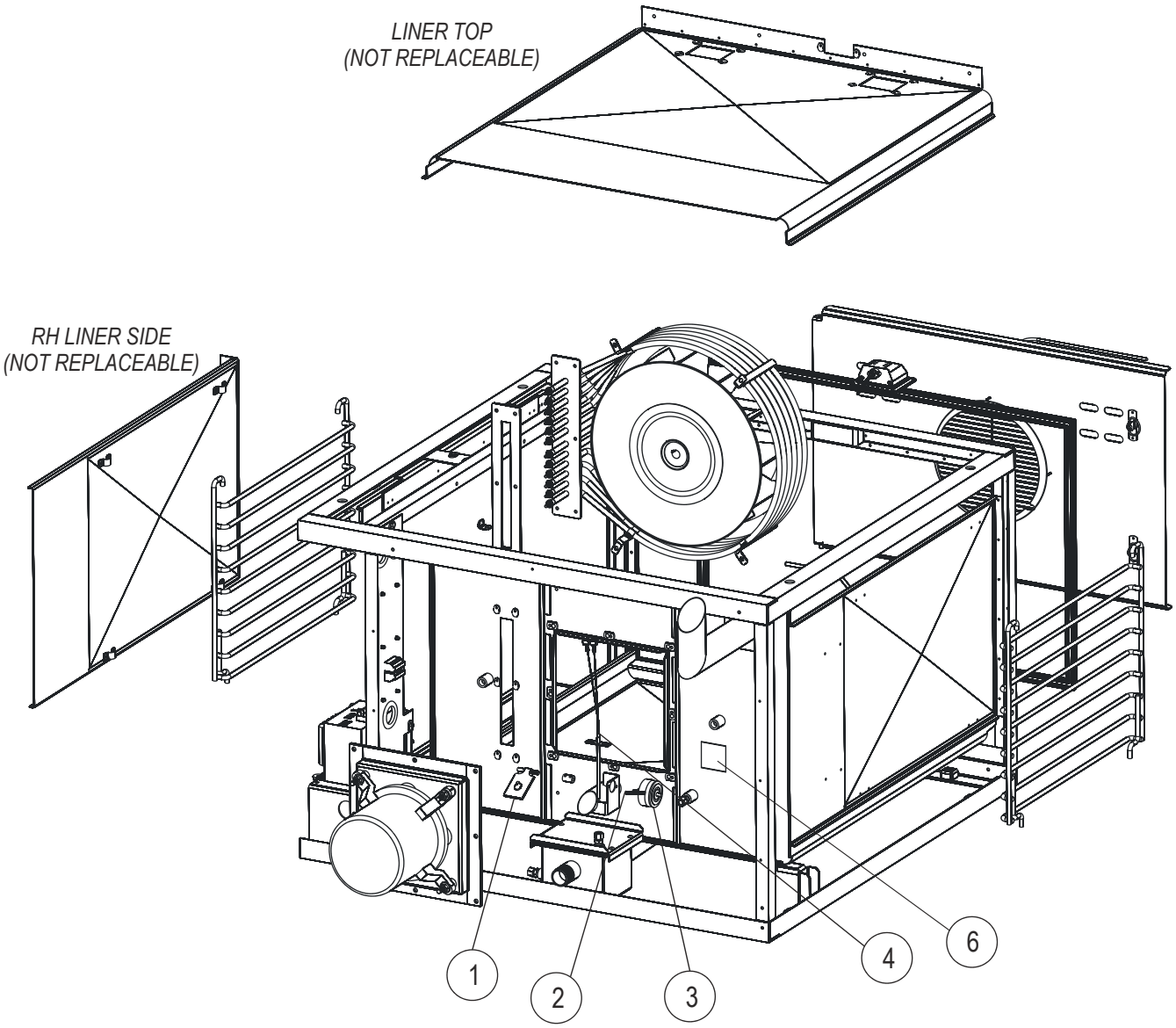

For HV-100E Ovens (Serial Letter Code KE or KC)

Ref. No.	Part No.	Description
1	50204	VENT LID ASSEMBLY (BEFORE 6/21/12)
1	55024	VENT LID ASSEMBLY W/COUPLING (AFTER 6/21/12)
2	39329	SHAFT COUPLING (BEFORE 6/21/12)
2	55025	SHAFT COUPLING (AFTER 6/21/12)
3	53008	CAVITY VENT SOLENOID
4	36720	QUENCH PROBE
6	58992	GASKET & COVER

MOTOR

FOR HV-100E OVENS (MANUFACTURED BEFORE 1/20/2017)

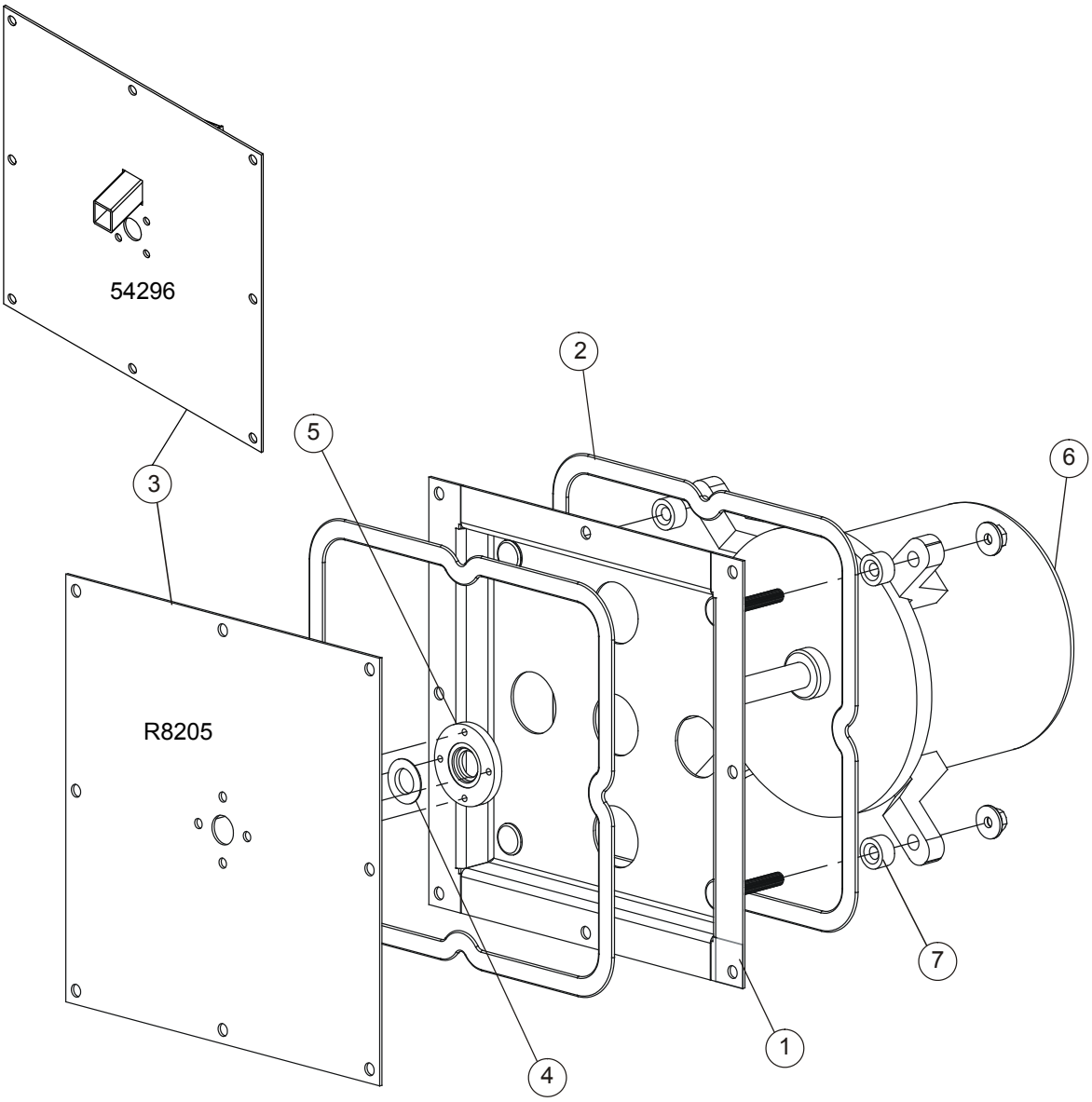

For HV-100E Ovens (Serial Letter Code KE or KC)

Ref. No.	Part No.	Description
1	39448	MOTOR MOUNT ASSEMBLY (BEFORE 6/21/12)
1	54294	MOTOR MOUNT ASSY (AFTER 6/21/12)
2	56956	MOTOR MOUNT GASKET
3	R8205	PLATE, FAN BRACKET COVER (BEFORE 6/21/12)
3	54296	PLATE, FAN BRACKET COVER (AFTER 6/21/12)
4	R4244	SHAFT SEAL
5	R8955	SEAL RETAINER
6	59909	MOTOR, 220V, 1/2 HP WITH KEY
7	R1971	SPACER, RACK GUIDE (QTY 4)

ELECTRICAL PANEL

FOR HV-100E OVENS (MANUFACTURED BEFORE 1/20/2017)

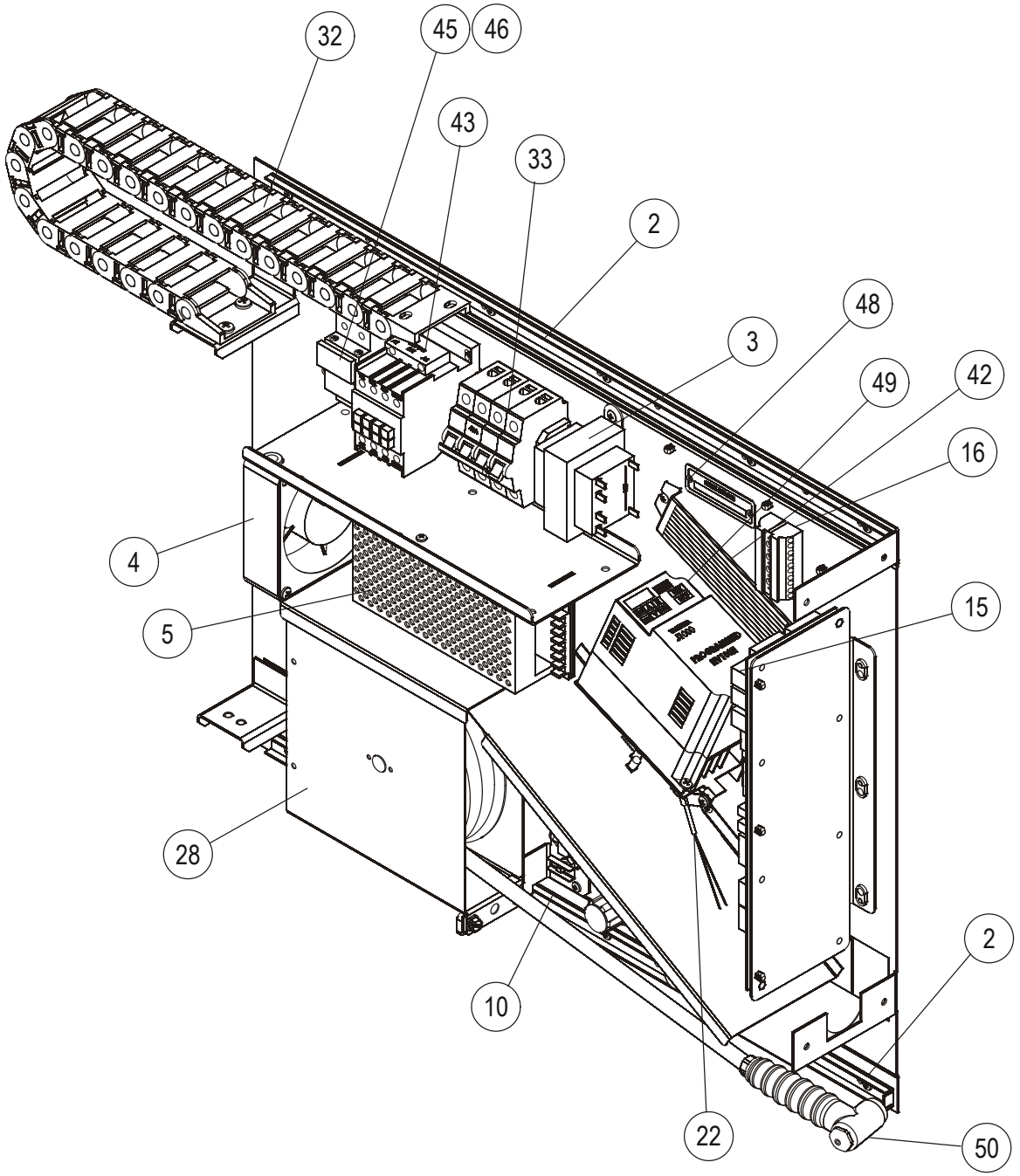

ELECTRICAL PANEL

FOR HV-100E OVENS (MANUFACTURED BEFORE 1/20/2017)

For HV-100E Ovens (Serial Letter Code KE or KC)

Ref. No.	Part No.	Description
2	51588	DRAWER SLIDE, MOVING
3	24356	TRANSFORMER, 120V TO 24V 80VA
4	52947	AXIAL FAN, 4" (24V)
5	52946	24VDC POWER SUPPLY
	M3166	FUSE, POWER SUPPLY
10	58533	ASSY, WATER MANIFOLD
	58350	FLOW VALVE AFTER 5-15-2015
15	54380	INTERFACE BOARD, MANUAL OR MENUSELECT CONTROLS
	53206	INTERFACE BOARD, TOUCHSCREEN CONTROLS (BEFORE 11/8/13)
	57727	INTERFACE BOARD, TOUCHSCREEN CONTROLS (AFTER 11/8/13)
16	50952	TERMINAL BLOCK, 5 POSITION PUSH IN
22	51516	PROBE, 3/16" DIA. 100 OHM RTD
28	51605	ASSY, MINIATURE HOSE REEL
32	52292	2" WIDE CABLE CARRIER
33	53271	50A CIRCUIT BREAKER 208-240V (14 KW ELEMENT)
33	52446	25A CIRCUIT BREAKER 440-480V (14 KW ELEMENT)
42	52706	RESISTOR, MOTOR BRAKING
43	52717	CONTACTOR, 3 PHASE, 60A, 24VDC COIL FOR 12 KW ELEMENT(AFTER 6-15-2009)
	39120	RELAY, SOLID STATE (BEFORE 6-15-2009)
45	51454	FUSE HOLDER, 440-480V ONLY
46	51455	FUSE, 7A 600V, 440-480V ONLY
49	52680	INVERTER DRIVE, PROGRAMMED HV100E
	57681	INVERTER DRIVE, PROGRAMMED DUNKIN DONUTS
50	52998	HOSE REEL NOZZLE
	52663	WATER TUBING KIT (CONSISTS OF 6' OF EACH COLOR TUBING)
	51016	HARNESS, INVERTER DRIVE
	51616	FITTING, 1/4NPT X 1/4 TUBE PUSH-IN
	52351	BLUE POLYURETHANE TUBING (BY THE INCH)
	53902	NOISE FILTER

EXTERIOR COMPONENTS

FOR HV-100E OVENS (MANUFACTURED BEFORE 1/20/2017)

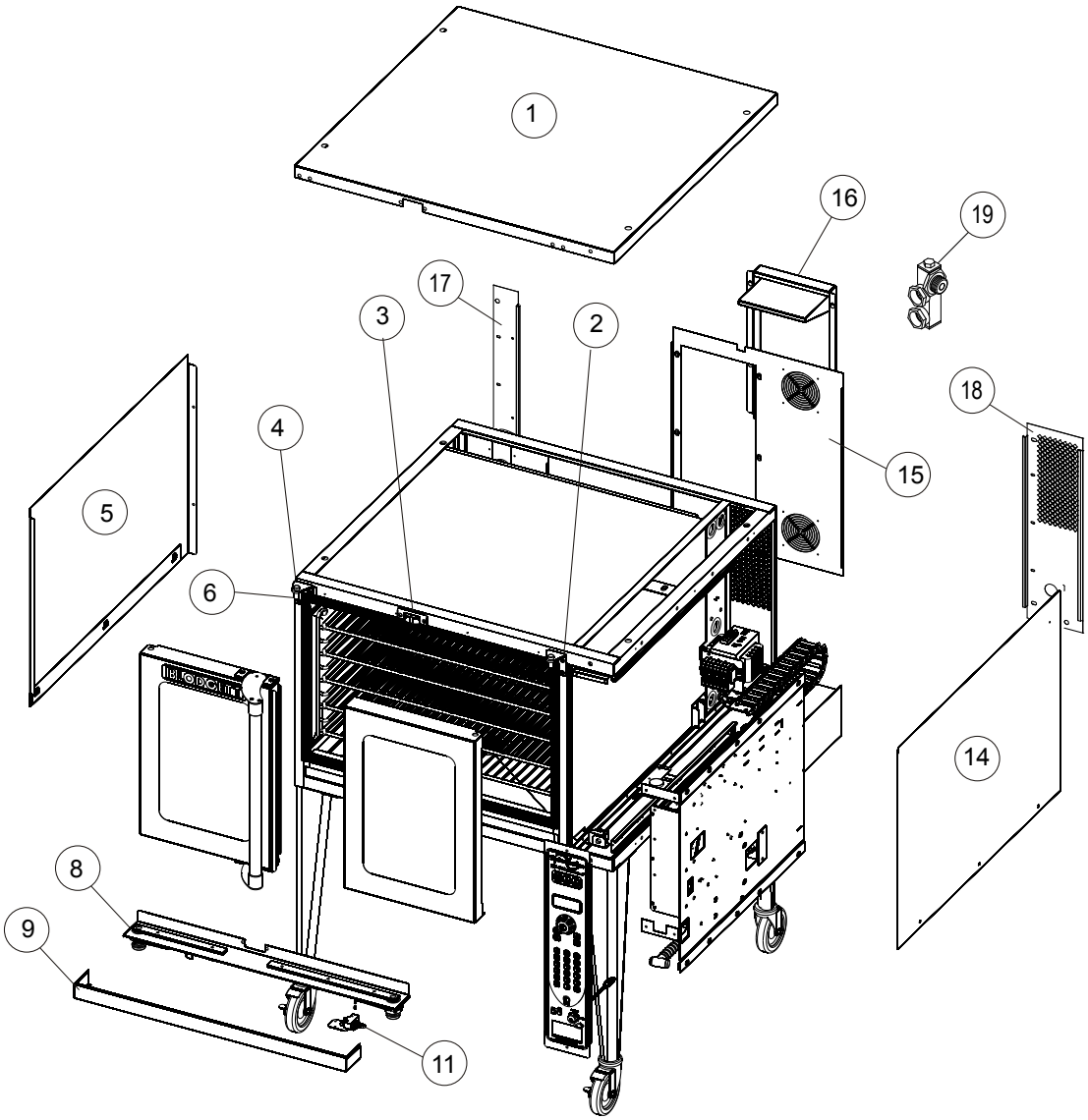

For HV-100E Ovens (Serial Letter Code KE or KC)

Ref. No.	Part No.	Description
1	51253	BODYTOP
2	51082	RH HINGE
3	57889	DOOR CATCH (TOP AND BOTTOM)
4	51081	LH HINGE
5	52479	LH BODYSIDE
6	51591	HINGE PIN (LEFT AND RIGHT)
8	57953	TURNBUCKLE ASSEMBLY
9	51698	FRONT TRIM
11	52514	DOOR SWITCH ASSEMBLY
14	51105	RH BODYSIDE
15	51651	CENTER BODY BACK, BEFORE 5/4/2015
	58329	CENTER BODY BACK, AFTER 5/4/2015
16	57104	BODYBACK ACCESS PANEL, BEFORE 5/4/2015
	58597	BODYBACK ACCESS PANEL, AFTER 5/4/2015
17	51255	RH BODYBACK BEFORE 5/4/2015
	58331	RH BODYBACK AFTER 5/4/2015
18	51254	LH BODYBACK BEFORE 5/4/2015
	58330	LH BODYBACK AFTER 5/4/2015
19	54715	WATER MANIFOLD ASSEMBLY

HV-100E-AB OVENS

SERIAL LETTER CODE "KL"

(All Full Size Hydrovection ovens manufactured after 1/20/2017)

SMARTTOUCH CONTROL

FOR HV-100E-AB OVENS (MANUFACTURED AFTER 1/20/2017 AND BEFORE 8/1/2017 FOR GENERAL MARKET OR AFTER 1/20/2017 AND BEFORE 9/1/2018 FOR DUNKIN DONUTS)

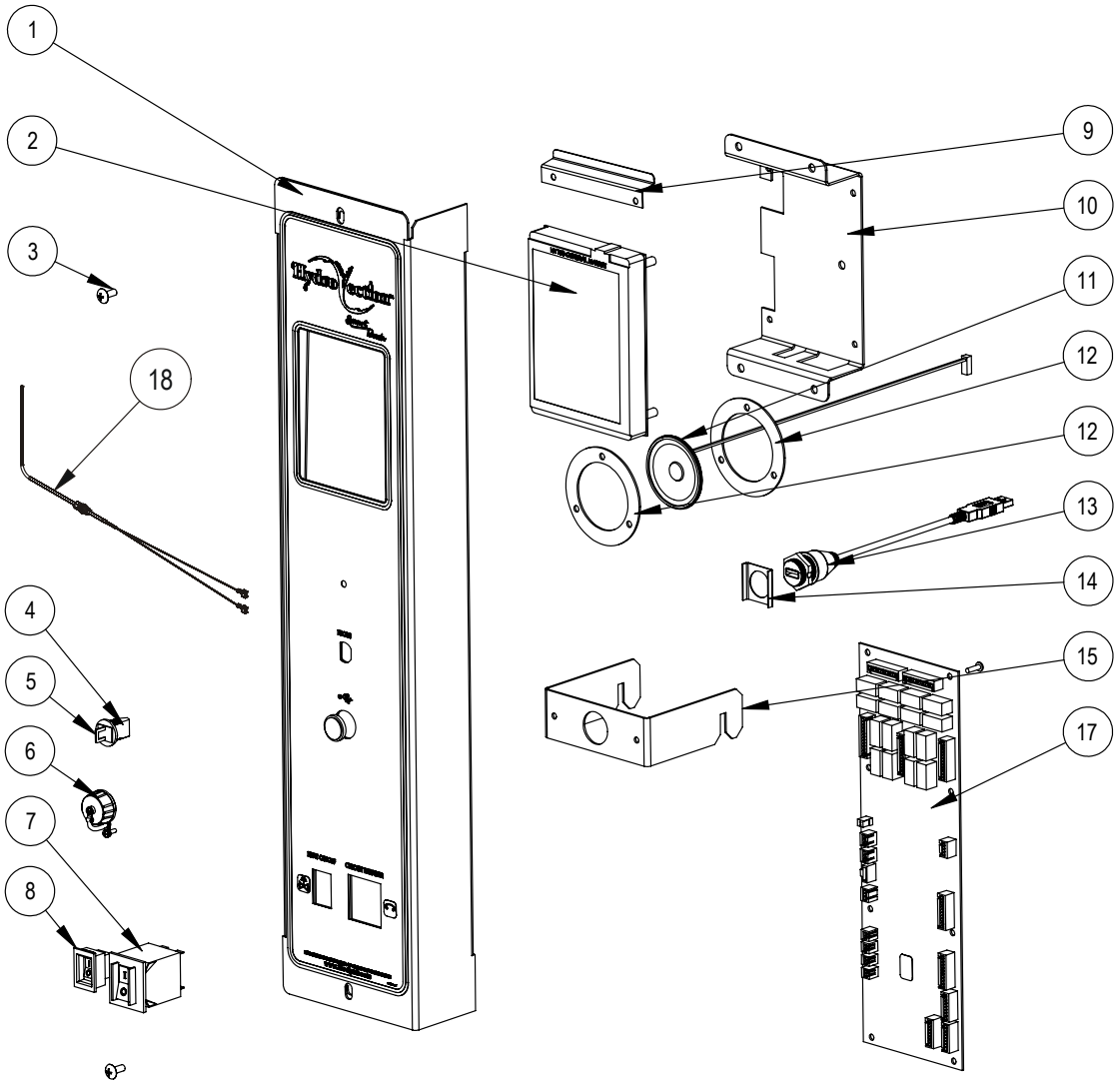

For HV-100E Ovens (Serial Letter Code KL)

Ref. No.	Part No.	Description
1	59205	PANEL & DECAL
2	59148	TOUCH SCREEN, HV100
	59519	TOUCH SCREEN, HV100, DUNKIN DONUTS
	59521	TOUCH SCREEN, HV100, LUCILLE'S BBQ
3	16384	10-24 X 1/2 TRUSS HEAD SCREW
4	39781	MEAT PROBE JACK
5	39782	MEAT PROBE JACK PLUG
6	52161	COVER, USB
7	39688	CIRCUIT BREAKER, 20A
8	36376	SWITCH, GAS, ON/OFF
9	52806	DEFLECTOR

Ref. No.	Part No.	Description
10	53986	TOUCH SCREEN FRAME
11	59777	SPEAKER KIT, W/RETAINERS
12	59616	SPEAKER RETAINER
13	52160	USB CABLE
14	52600	SPACER, USB PORT
15	58918	BRACKET, HANGING HV100
16	54330	COMMUNICATION CABLE, HV100 TS
17	57727	RELAY BOARD, TOUCH SCREEN
18	53007	CAVITY PROBE
	59080	CONTROL PANEL ASSEMBLY, COMPLETE AS SHOWN (WITHOUT RELAY BOARD)

SMARTTOUCH 2 CONTROL

FOR HV-100E-AB OVENS (MANUFACTURED AFTER 8/1/2017, OR AFTER 9/1/2018 FOR DUNKIN DONUTS)

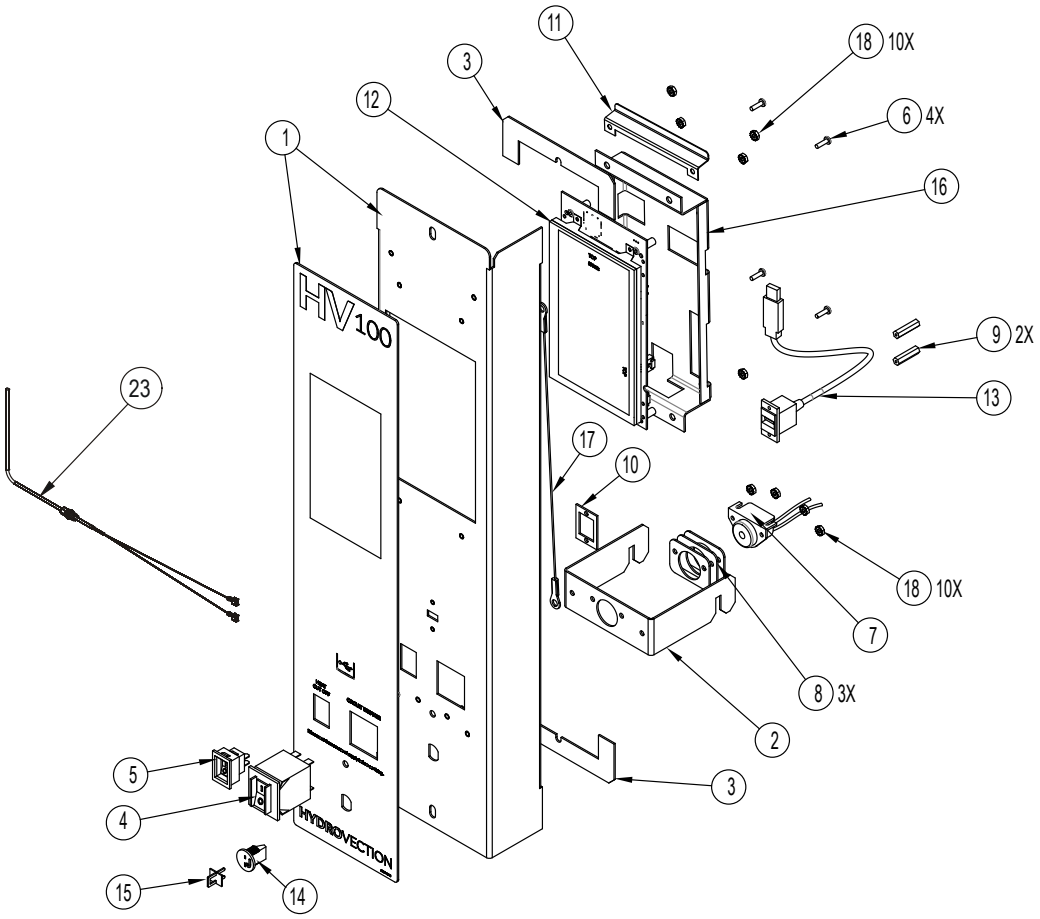

For HV-100E Ovens (Serial Letter Code KL)

Ref. No.	Part No.	Description
1	59855	PANEL & DECAL ASSY
2	58918	HANGING BRACKET
3	R4872	GASKET, TILT PANEL, BY THE INCH
4	39688	CIRCUIT BREAKER, 20A
5	36376	GAS ON/OFF SWITCH
6	34478	SCREW, 6-32 X 0.5 SELF TAPPING
7	53759	BUZZER
8	53921	BUZZER SPACER
9	59434	STANDOFF #4-40 X1"
10	59280	USB SPACER
11	59349	DEFLECTOR BRACKET
12	59360	CONTROL, TS, HV100
12	59812	CONTROL, TS, HV100 K12
12	59720	CONTROL, TS LBBQ
12	59719	CONTROL, TS LHSH
	59718	CONTROL, TS DD
13	59565	USB CABLE
14	39781	MEAT PROBE JACK
15	39782	MEAT PROBE JACK PLUG
16	59348	TOUCH SCREEN BRACKET
17	20043	12" STRAIN RELIEF
18	M3367	NUT, 6-32 KEPS
19	59032	HARNESS, HV FRONT LINE (NOT SHOWN)
20	54330	COM CABLE, 20", TOUCHSCREEN (NOT SHOWN)
21	59542	HARNESS, BEEPER, ADDER (NOT SHOWN)
22	59029	HARNESS, HV FRONT TS DIGI (NOT SHOWN)
23	53007	CAVITY PROBE

MANUAL CONTROL

FOR HV-100E-AB OVENS (MANUFACTURED AFTER 1/20/2017 AND BEFORE 8/1/2017)

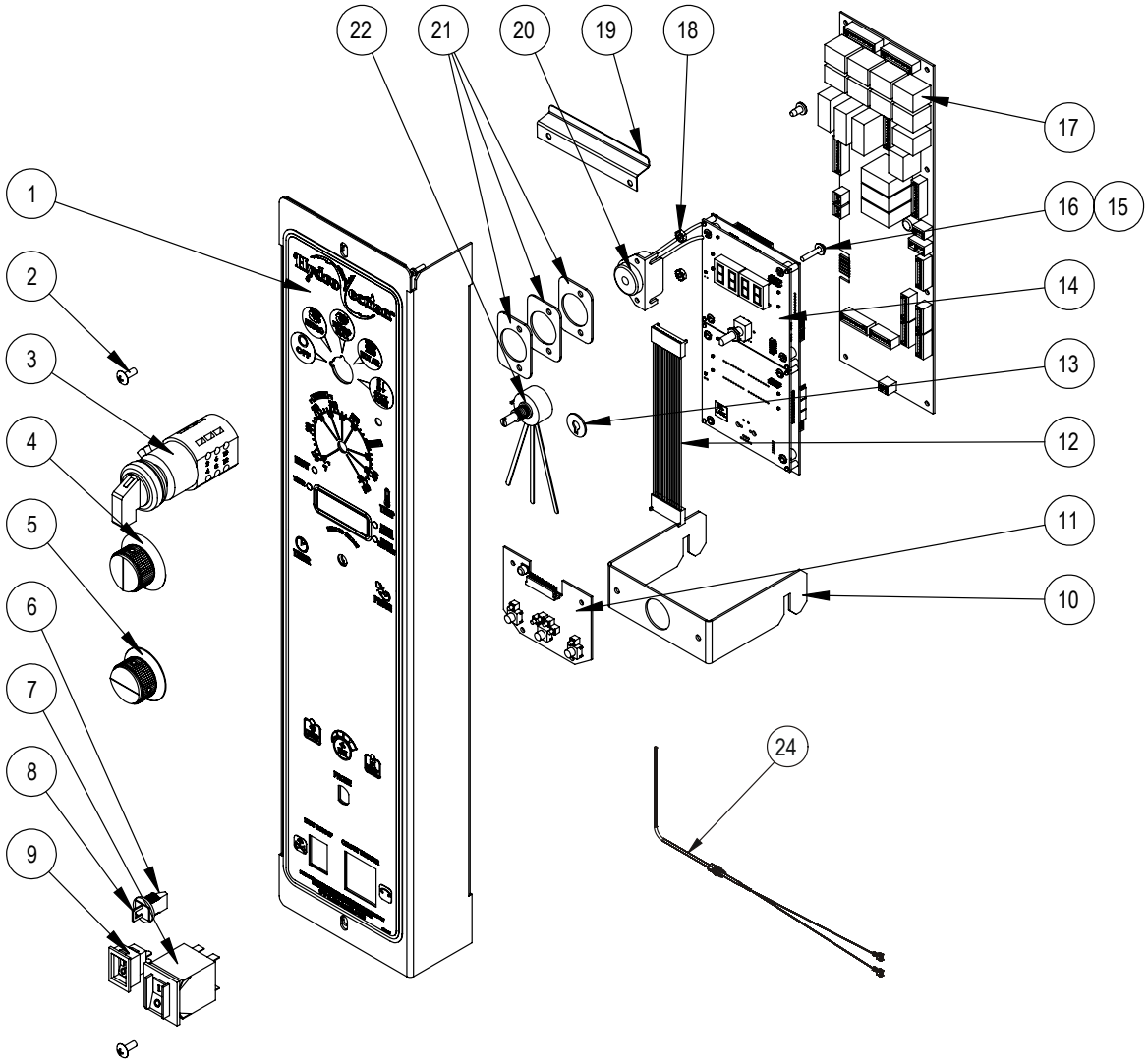

For HV-100E Ovens (Serial Letter Code KL)

Ref. No.	Part No.	Description
1	59206	PANEL & DECAL
2	16384	10-24 X 1/2 TRUSS HEAD SCREW
3	52466	ROTARY SWITCH, 5 POSITION
4	36616	KNOB, WITH ARROW
5	36617	KNOB, NO ARROW
6	39781	MEAT PROBE JACK
7	39688	CIRCUIT BREAKER, 20A
8	39782	MEAT PROBE JACK PLUG
9	36376	GAS CUTOFF SWITCH
10	58918	BRACKET, HANGING, HV100
11	53157	3 BUTTON CIRCUIT BOARD
	54075	COMMUNICATION CABLE (NOT SHOWN)
12	53344	MANUAL CONTROL CONNECTOR HARNESS
13	54340	ENCODER SUPPORT SPACER
14	59150	PROGRAMMED CONTROL, HV100 MANUAL
15	M1421	#6 WASHER
16	34480	#6-32 X 3/4 SCREW
17	54380	INTERFACE BOARD, HV100 MANUAL
18	M3367	6-32 NUT, KEPS
19	52806	DEFLECTOR
20	53759	BUZZER
21	53921	BUZZER SPACER
22	18234	POTENTIOMETER
23	59078	MANUAL CONTROL, FULL ASSEMBLY AS SHOWN (WITHOUT INTERFACE BOARD)
24	53007	CAVITY PROBE

PROGRAMMABLE MANUAL CONTROL

FOR HV-100E-AB OVENS (MANUFACTURED AFTER 8/1/2017)

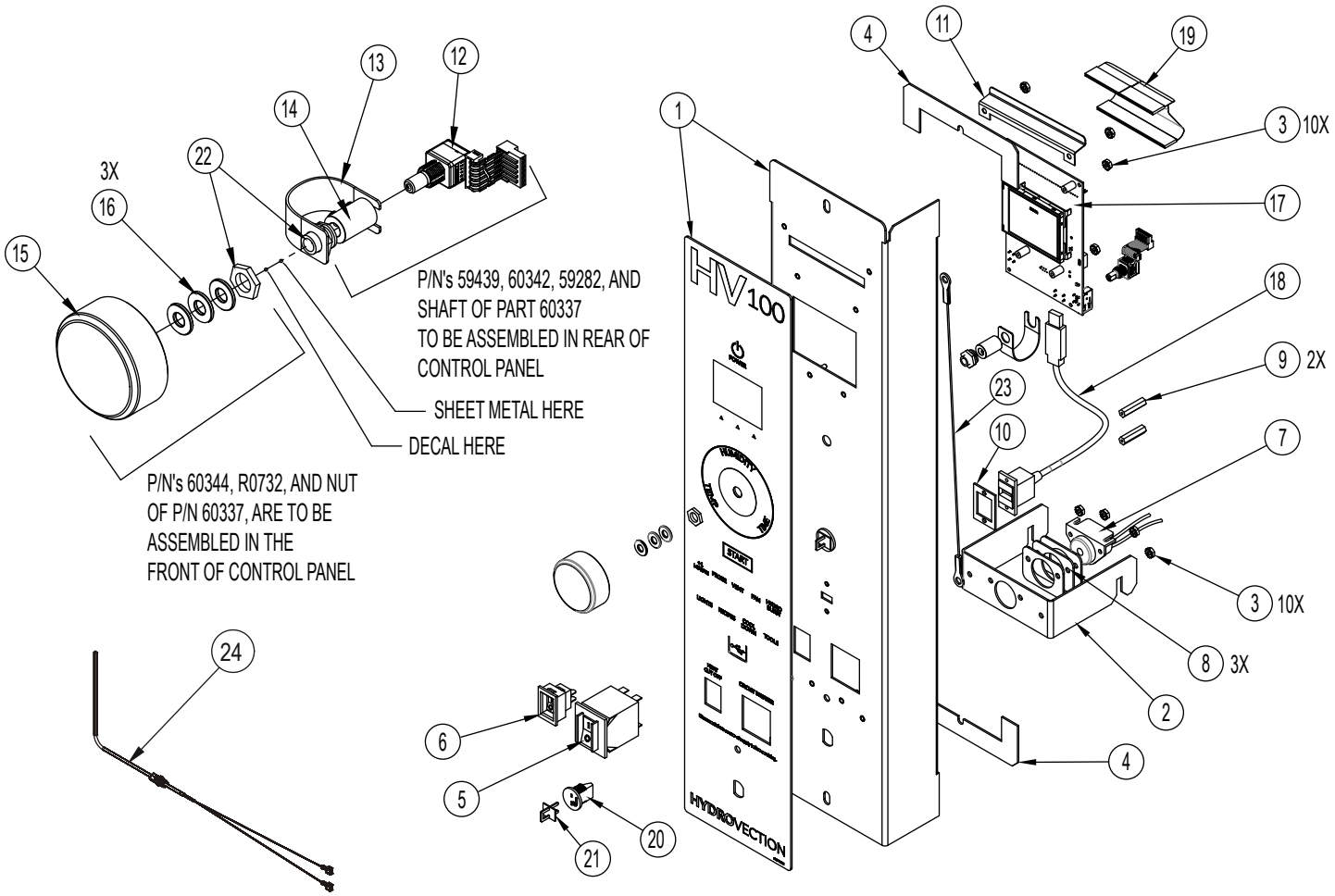

For HV-100E Ovens (Serial Letter Code KL)

Ref. No.	Part No.	Description
1	59854	PANEL & DECAL ASSY
2	58918	HANGING BRACKET
3	M3367	NUT, 6-32 KEPS
4	R4872	TILT PANEL, GASKET, BY THE INCH
5	39688	CIRCUIT BREAKER, 20A
6	36376	GAS ON/OFF SWITCH
7	53759	BUZZER
8	53921	BUZZER SPACER
9	59434	STANDOFF #4-40 X 1"
10	59280	USB SPACER
11	59349	DEFLECTOR BRACKET
12	59282	ENCODER
13	60342	PLASTIC BRACE
14	59439	COUPLING, 1/4" SET SCREW
15	60344	KNOB, ENCODER
16	R0732	#10 WASHER
17	59366	CONTROL, MANUAL HV100
17	59817	CONTROL, MANUAL HV100, K12
18	59565	USB CABLE
19	59709	CABLE, CONNECTING CONTROL
20	39781	MEAT PROBE JACK
21	39782	MEAT PROBE PLUG
22	60337	SHAFT LEAD-IN
23	20043	12" STRAIN RELIEF
24	53007	CAVITY PROBE
	54330	COM CABLE, 20", TOUCHSCREEN (NOT SHOWN)
	59032	HARNESS, HV FRONT LINE (NOT SHOWN)
	59552	HARNESS, HV100 AB, MANUAL, FRONT (NOT SHOWN)

DOORS

FOR HV-100E-AB OVENS (MANUFACTURED AFTER 1/20/2017)

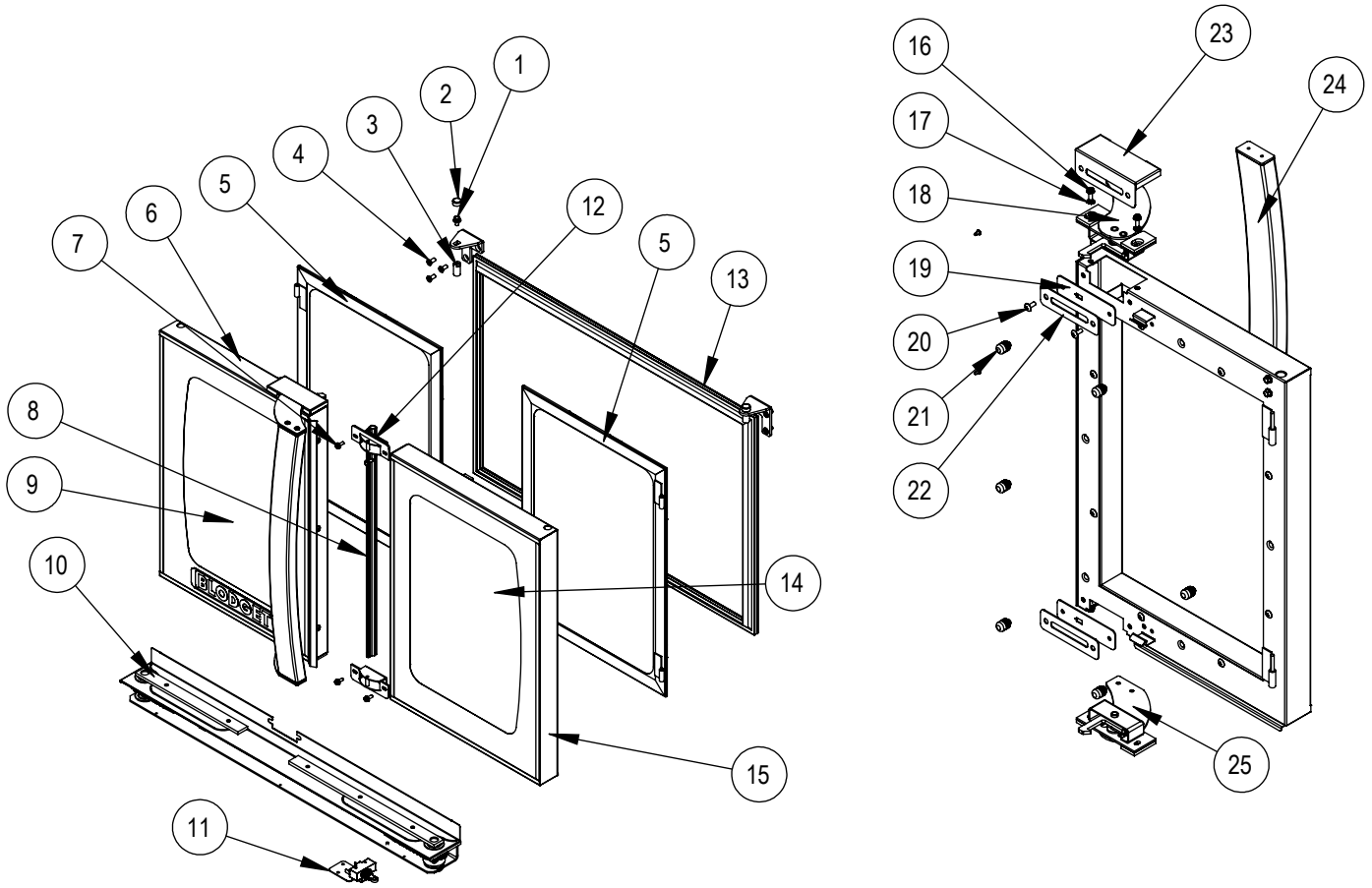

For HV-100E Ovens (Serial Letter Code KL)

Ref. No.	Part No.	Description
1	52447	DOOR PIN BOLT
2	52666	HEX BOLT CAP
3	51591	PIN, DOOR
4	M1118	SCREW, 1/4-20 X 5/8, FLAT HEAD
5	59013	ASSY, INNER GLASS
6	59140	DOOR ASSEMBLY, LH (COMPLETE AS SHOWN)
7	57725	10-24 X 1/2 SERRATED HEX FLANGE
8	51610	GASKET, CENTER DOOR
9	59007	FRONT GLASS, LH
10	57953	ASSY, DOOR TURNBUCKLE
11	52514	ASSEMBLY, DOOR SWITCH
12	58824	LATCH CATCH ASSY
13	52716	GASKET, HV100 PERIMETER BLADE
14	59006	FRONT GLASS, RH
15	59141	DOOR ASSEMBLY, RH (COMPLETE AS SHOWN)
16	M6315	10-24 X 1/2 HEX WASHER HEAD SCREW
17	16479	LOCK WASHER, EXTERNAL TOOTH
18	58939	LATCH ASSY, RECT, TOP
19	55537	GASKET, DOOR LATCH
20	16384	10-24 X 1/2 TRUSS HEAD SCREW
21	61036	RUBBER BUMPER
22	55536	PLATE, LATCH COVER
23	59018	COVER, LATCH, HV100
24	55608	DOOR HANDLE, HV100
25	58938	LATCH ASSY, RECT, BOTTOM

INTERIOR COMPONENTS

FOR HV-100E-AB OVENS (MANUFACTURED AFTER 1/20/2017)

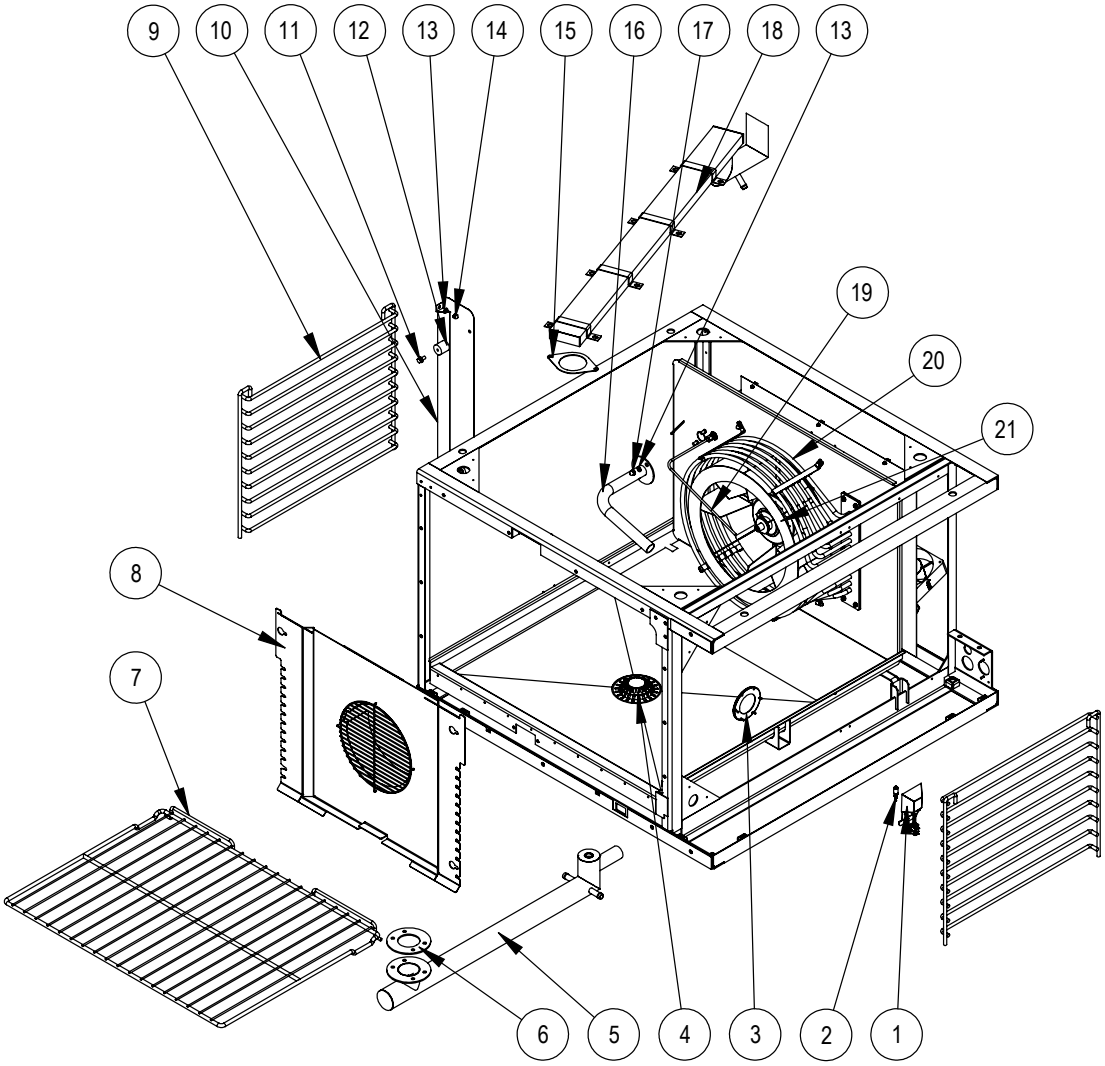

For HV-100E Ovens (Serial Letter Code KL)

Ref. No.	Part No.	Description
1	53194	LAMP HOUSING ASSEMBLY
2	53101	HALOGEN BULB
3	53081	BEZEL, GASKET & LENSE ASSEMBLY
4	39336	COVER, DRAIN
5	59154	DRAIN ASSEMBLY
6	59162	GASKET, DRAIN
7	59046	WIRE RACK
8	58864	BAFFLE, HV100E
9	59047	SIDE RACK SUPPORT
	53270	4 PAN FIXED SSID RACK SUPPORT (Dunkin)
10	58865	BEFFLE, SIDE SUPPORT
11	M3615	10-24 X 1/2, FLANGE HEAD BOLT
12	58997	SPACER
13	M0417	LOCK WASHER, 1/4"
14	R0712	10-24 ACORN NUT
15	58998	GASKET, LINER VENT
16	55020	CAVITY VENT
17	11596	1/4-20 LOW PROFILE ACORN NUT
18	58866	VENT ASSEMBLY, HV100
19	53007	CAVITY TEMP PROBE
20	53280	208V ELEMENT KIT
20	53281	220/240V ELEMENT KIT
20	53282	240/480V ELEMENT KIT
21	55303	BLOWER WHEEL WITH KEY

REAR COMPONENTS

FOR HV-100E-AB OVENS (MANUFACTURED AFTER 1/20/2017)

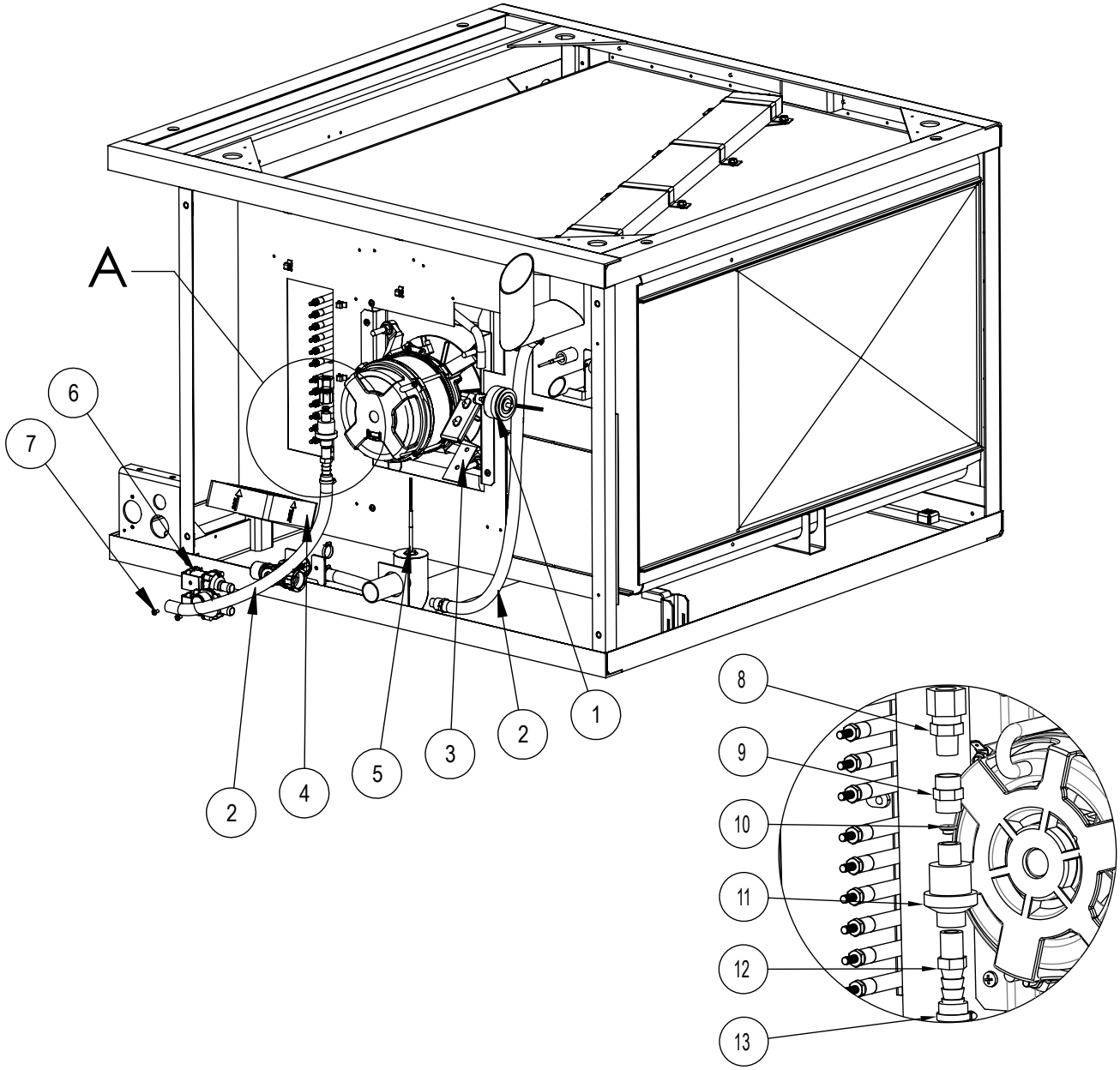

For HV-100E Ovens (Serial Letter Code KL)

Ref. No.	Part No.	Description
1	39324	ROTARY SOLENOID
2	58270	SILICONE HOSE (BY THE INCH)
3	55023	VENT GASKET
4	52947	AXIAL FAN
5	58871	DRAIN TEMP PROBE
6	59630	KIT, DUAL OUTPUT WATER VALVE
7	R1270	SCREW, M4-.7 X 10MM

Ref. No.	Part No.	Description
8	59333	COMPRESSION FITTING
9	59332	COUPLING
10	58348	FLOW VALVE ORIFICE
11	58347	FLOW VALVE
12	58884	FITTING, BARBED
13	R0080	HOSE CLAMP

MOTOR ASSEMBLY

FOR HV-100E-AB OVENS (MANUFACTURED AFTER 1/20/2017)

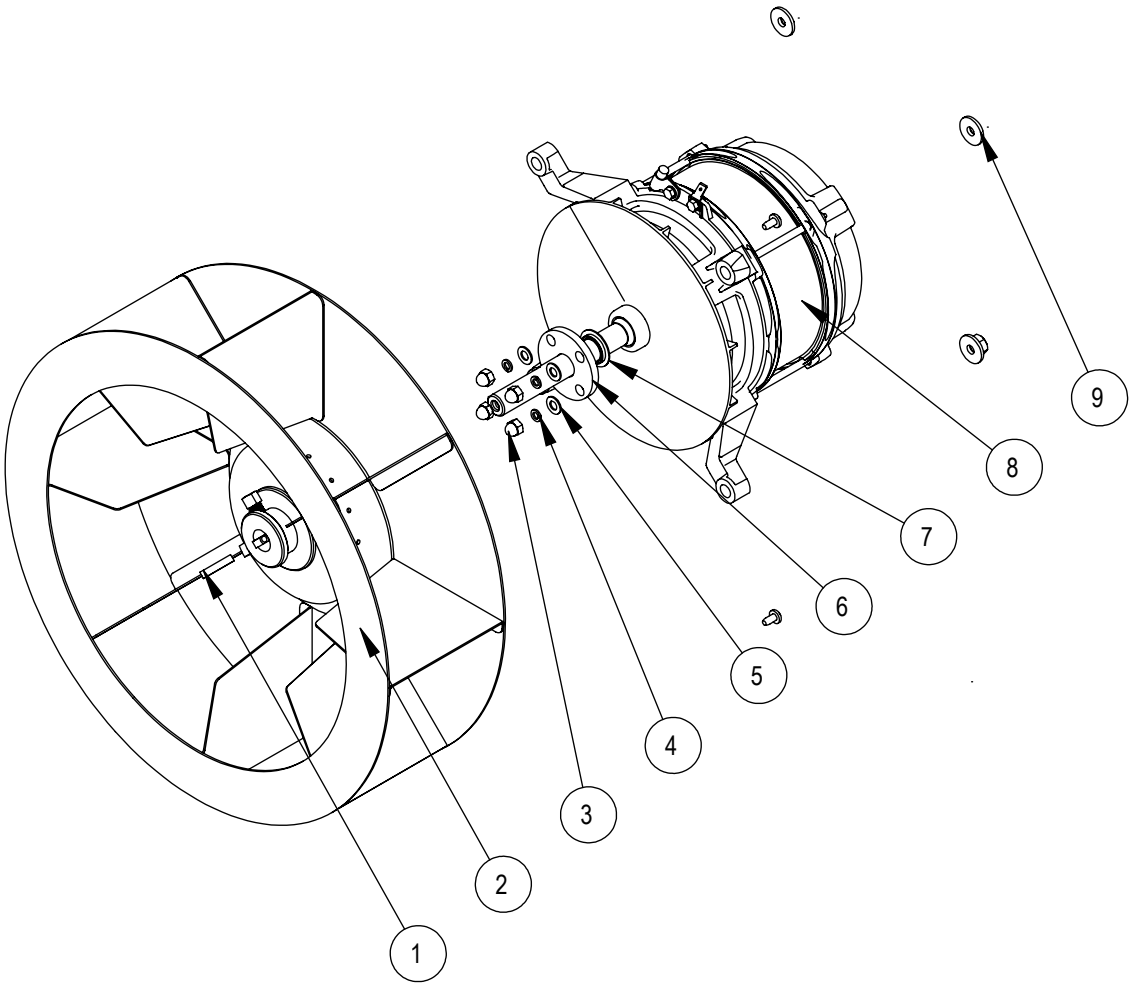

For HV-100E Ovens (Serial Letter Code KL)

Ref. No.	Part No.	Description
1	54960	KEY, 3/16 X 1"
2	55303	BLOWER WHEEL
3	R0712	ACORN NUT, 10-24
4	R0726	LOCK WASHER, #10
5	R0733	FLAT WASHER, #10
6	59059	SHAFT SEAL RETAINER
7	R4244	SHAFT SEAL
8	59909	CONVECTION MOTOR
9	8628	5/16-18 SERRATED FLANGE NUT

EXTERIOR COMPONENTS

FOR HV-100E-AB OVENS (MANUFACTURED AFTER 1/20/2017)

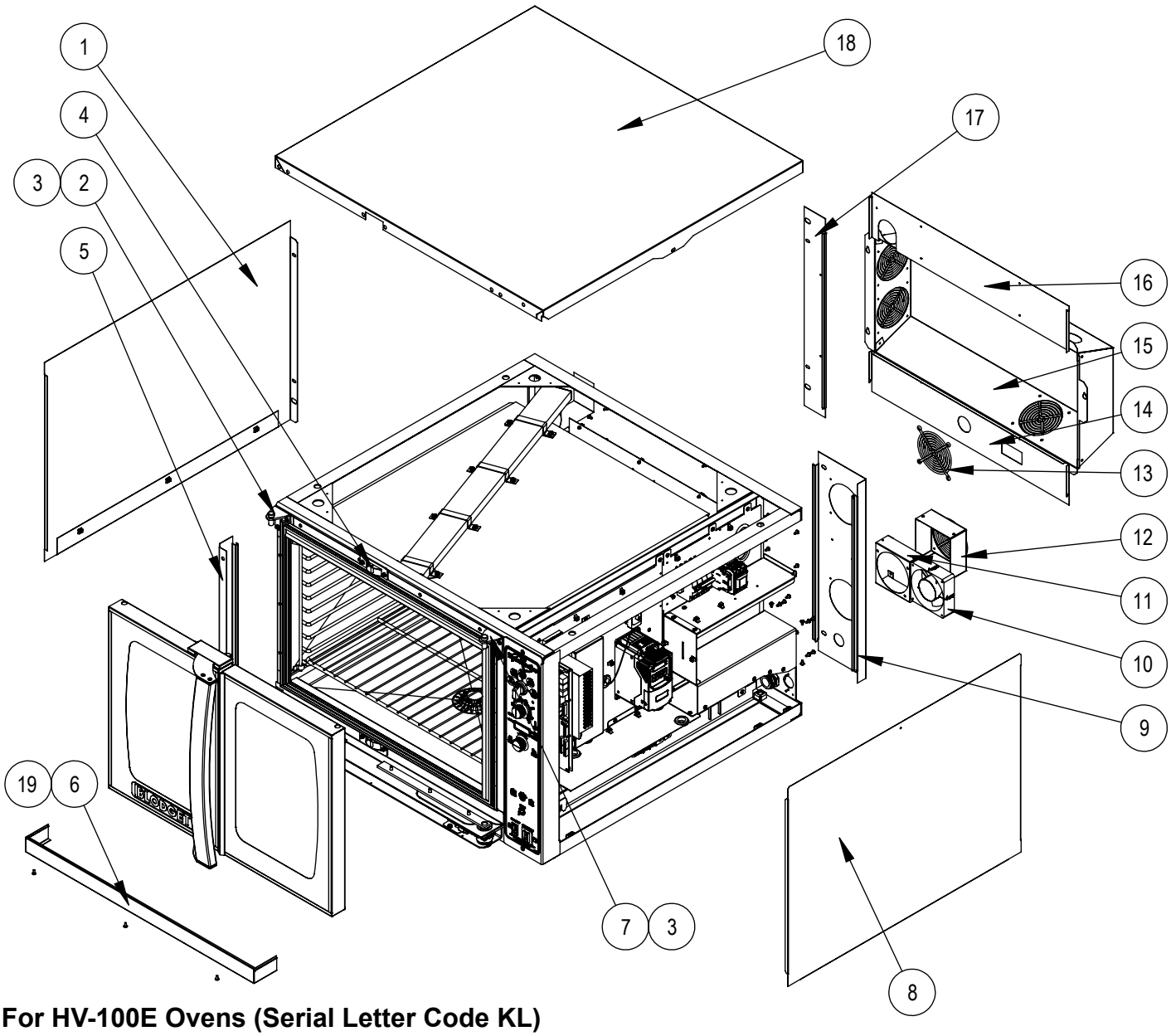

For HV-100E Ovens (Serial Letter Code KL)

Ref. No.	Part No.	Description
1	58910	BODY SIDE, LEFT
2	51081	HINGE, LEFT
3	51591	HINGE PIN (LEFT & RIGHT)
4	58824	LATCH CATCH ASSEMBLY
5	58902	FRONT TRIM, LEFT
6	51698	TRIM, LOWER FRONT
7	51082	HINGE, RIGHT
8	58911	BODY SIDE, RIGHT
9	58978	BODY BACK, LEFT, ELECTRIC
10	52947	AXIAL FAN
11	58970	FAN MOUNT, HV100
12	59020	FAN COVER, HV100
13	M0571	FAN GUARD, 4"
14	59166	BODY BACK, CENTER BOTTOM
15	59167	BODY BACK, ACCESS COVER
16	59165	BODY BACK, CENTER TOP
17	58903	BODY BACK, RIGHT
18	58901	BODY TOP
19	16384	10-24 TRUSS HEAD SCREW

ELECTRICAL COMPONENTS

FOR HV-100E-AB OVENS (MANUFACTURED AFTER 1/20/2017)

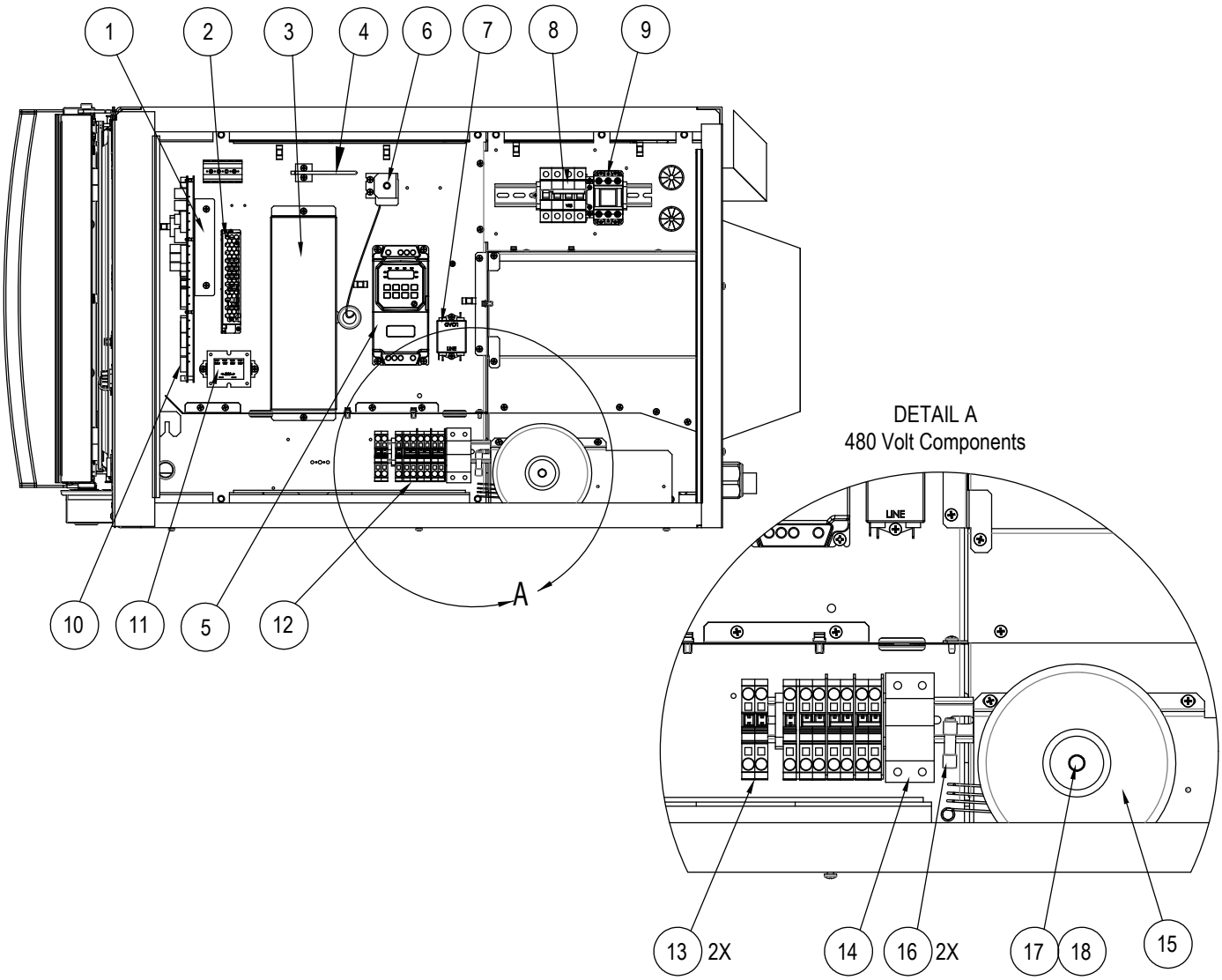

For HV-100E Ovens (Serial Letter Code KL)

Ref. No.	Part No.	Description
1	53321	RELAY BOARD BRACKET
2	59331	24VDC POWER SUPPLY
3	58897	LIGHT ACCESS COVER
4	56873	PROBE, 1K RTD
5	59744	PROG. INVERTER (TS CTRL)
5	59743	PROG. INVERTER (MANUAL CTRL)
6	36441	THERMOSTAT, HIGH LIMIT
7	53902	EMI FILTER
8	53271	CIRCUIT BREAKER 50A 3 POSITION
9	59049	CONTACTOR
10	57727	RELAY BOARD, TOUCHSCREEN & 2.8" MANUAL AFTER 8/1/2017

Ref. No.	Part No.	Description
10	54380	REALY BOARD, HV100 MANUAL BEFORE 7/31/2017
11	38303	TRANSFORMER, 40V A
12	39733	MAIN POWER TERMINAL BLOCK W/ GROUND
13	52201	TERMINAL BLOCK
14	51454	FUSE HOLDER 600V, 30A
15	59201	TOROIDAL TRANSFORMER 480/240
16	51455	FUSE 600V, 7A
17	56119	HEX HEAD CAP, 5/16" -18 x 3.5"
18	55642	WASHER, TOROIDAL MOUNTING

ELEMENT COMPONENTS

FOR HV-100E-AB OVENS (MANUFACTURED AFTER 1/25/2017)

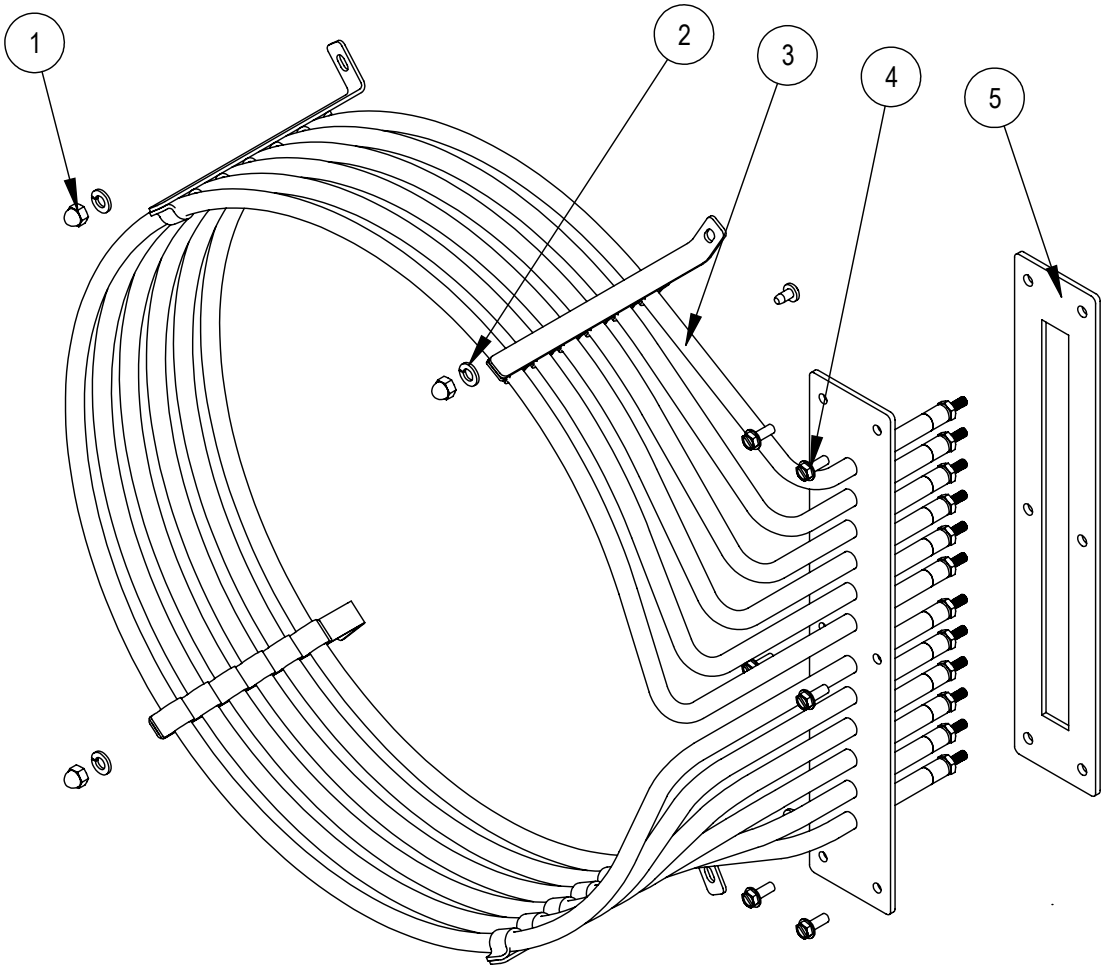

For HV-100E Ovens (Serial Letter Code KL)

Ref. No.	Part No.	Description
1	R0712	10-24 ACORN NUT
2	M0417	LOCK WASHER
3	53280	208V ELEMENT KIT
3	53281	220/240V ELEMENT KIT
3	53282	240/480V ELEMENT KIT
4	M6315	10-24 X 1/2 HEX WASHER HEAD SCREW
5	52304	GASKET, ELEMENT HV100E

HV-100E & HV-100E-AB OVENS

ACCESSORIES

FOR ALL OVENS

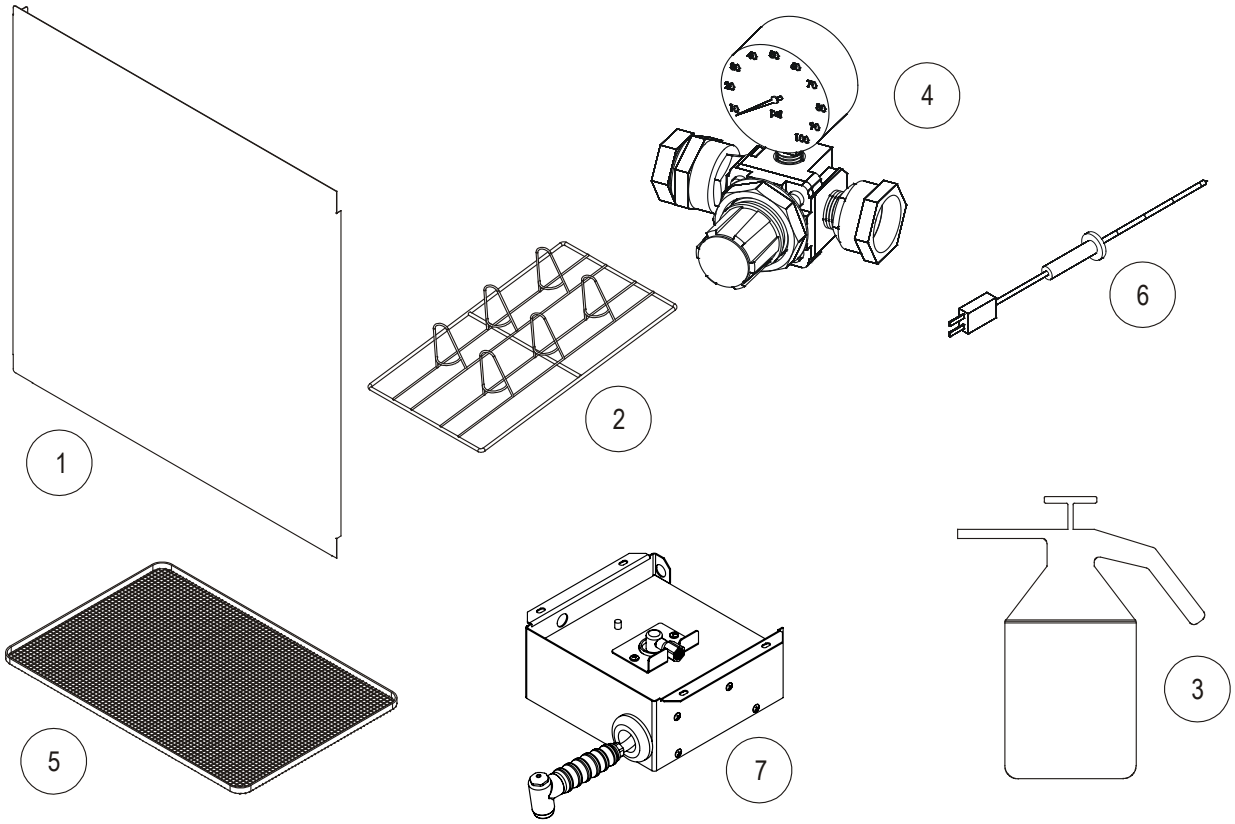

Ref. No.	Part No.	Description
1	52889	HEAT SHIELD KIT
2	52387	CHICKEN ROASTING RACK
3	R10955	SPRAY BOTTLE
4	52815	PRESSURE REGULATOR, W/O HOSE REEL
	54734	PRESSURE REGULATOR W/HOSE REEL
5	54247	FRENCH FRY RACK
	8598	25" S/S LEGS W/FEET (SET OF 4)
	16002	CASTERS (SET OF 4)
	57712	36" OPEN STAND W/GUIDES AND FEET
	57689	36" OPEN STAND W/GUIDES AND CASTERS
	33196	6" SEISMIC LEGS (SET OF 4)
	8600	6" S/S LEGS W/FEET (SET OF 4)
	53057	8-1/2" LEGS W/CASTERS (SET OF 4)
	53058	11" LEGS W/FEET (SET OF 4)
	53059	11" LEGS W/SEISMIC FEET (SET OF 4)
6	56545	MEAT PROBE, 4", DUAL SENSOR

Ref. No.	Part No.	Description
6	56546	MEAT PROBE, 6", DUAL SENSOR
	57685	MEAT PROBE, 4" FILLET
7	54674	EXTERNAL HOSE REEL ASSEMBLY
	52998	SPRAY NOZZLE (PUSH-BUTTON) FOR HOSE REEL
	58537	KIT STACKING (HOSE REEL NOT INCLUDED)
	59292	SPRAY NOZZLE/PROBE HOLDER BRACKET
	52874	STACKING KIT, HV-100-AA WITH STANDARD DEPTH CONVECTION
	52896	STACKING KIT, HV-100-AA WITH BAKERY DEPTH CONVECTION
	59262	STACKING KIT, HV-100-AB WITH STANDARD DEPTH CONVECTION
	59260	STACKING KIT, HV-100-AB WITH BAKERY DEPTH CONVECTION
	59837	SPRAY NOZZLE ONLY (FOR EXTERNAL SPRAY HOSE)
	R10889	EXTERNAL SPRAY HOSE (W/O NOZZLE)